Research Square

Preprints are preliminary reports that have not undergone peer review.
They should not be considered conclusive, used to inform clinical practice,
or referenced by the media as validated information.

Extending Unified Theory of Acceptance and Use of Technology with Information System Quality Constructs to Predict Pre-Service Teachers Mobile Learning Adoption and Continuance Behaviour

REBECCA OJOCHIDE MARTINS
Yaba College of Technology
OLABANJI TAIWO SHODIPE
taiwo.shodipe@yabatech.edu.ng

Yaba College of Technology
OLUSOLA AYINLA OYAGBOLA
University of Lagos
ANIKE TEMITOPE SHODIPE
University of Lagos

Research Article

Keywords: UTAUT, Mobile learning, System quality, Information quality, Service quality, Pre-Service teachers

Posted Date: April 30th, 2026

DOI: https://doi.org/10.21203/rs.3.rs-9169158/v1

License: This work is licensed under a Creative Commons Attribution 4.0 International License.
Read Full License

Additional Declarations: No competing interests reported.

Abstract

The adoption of mobile learning to education eliminates barriers to teaching and learning activities. It introduces a new belief that teaching and learning activities can be executed without being limited by location and time. So, there is a general belief that if adopted among pre-service teachers, will improve usage and academic performance. The study employed a stratified sampling technique to select 475 pre-service teachers from Technical Vocational Education and Training (TVET) institutions. Data were collected through structured questionnaire designed on a five-point Likert scale, which captured respondents' perception on UTAUT and IS quality construct. Data were analyzed using Structural Equation Modelling with Partial Least Squares (SEM-PLS) through SmartPLS 3.0. The results revealed that student's intentions to use mobile learning significantly influenced their behaviour. Additionally, facilitating condition, social influence, performance expectancy and information quality influenced students' intentions to use mobile learning. The study indicated that mobile learning usage is highly predicted by its antecedents. Furthermore, the study suggests that the unified theory of acceptance and use of technology (UTAUT) can be enhanced by incorporating quality constructs to influence students' behaviour and promote adoption of mobile learning.

Introduction

The adoption of mobile learning removes barriers to teaching and learning (Shodipe & Ohanu, 2021), supporting traditional instruction, e-learning, and evaluation while adding value to educational systems. It represents an innovative shift in higher education (Casebourne, 2024; Ohanu & Chukwuone, 2018). Mobile learning involves accessing content across locations and times using devices such as tablets, laptops, and phones through wireless networks (Oberer & Erkollar, 2013). These devices such as PDAs, mobile phones, laptops, PCs, and e-books enable learning without time or location constraints (Şad & Göktaş, 2014). In higher education, mobile learning fosters collaboration and knowledge sharing via wireless networks (Sophonhiranrak, 2021).

Mobile learning also delivers information conveniently to learners and educators and supports personalized learning (Al-Emran et al., 2016). It enables learners to set goals, select resources, and access materials flexibly for personalized learning (Sophonhiranrak, 2021). Many countries, such as Italy, the Netherlands, New Zealand, the USA, Portugal, and Australia, invest heavily in educational technologies (Chow, 2013). These tools support collaborative, independent, and lifelong learning, however, there are varying challenges integrating mobile learning by culture, Japanese students showed low mobile learning engagement due to perceived low utility (Bull & Reid, 2004).), Malaysian students struggled with transfer of learning (Ramli et al., 2010), and information quality limited adoption in Finland (Koivumäki et al., 2008). Because mobile learning does not guarantee success in all settings, understanding user acceptance is essential (Amadin et al., 2018).

Despite technological growth, engagement remains low in some countries and institution most especially in developing countries (Kumar & Bervell, 2019). Factors influencing students' intentions to use mobile learning therefore require further investigation. Previous studies extended the Technology Acceptance

Model (Ohanu et al., 2022) and Theory of Planned Behaviour (Cheung & Vogel, 2013). The UTAUT model identifies four constructs that directly influence technology acceptance (Venkatesh et al., 2003), and further extensions include self-management, innovativeness, playfulness, enjoyment, service quality, and ubiquity (Badwelan et al., 2016; Huan et al., 2015).

Teacher education programmes play a critical role in preparing pre-service teachers with the pedagogical knowledge, technological competence, and professional skills required for effective classroom practice (Ogbuaynya & Shodipe, 2022; Shodipe & Ogbuanya, 2024). Pre-service teachers are exposed to courses that integrate pedagogy, subject content knowledge, and educational technologies to enhance teaching and learning (Kuo & Kuo, 2020; Thomas & O'Bannon, 2013). Through teaching practice and technology-supported learning environments, pre-service teachers develop competencies in lesson planning, instructional delivery, classroom management, and the use of digital tools for teaching. Mobile learning has increasingly become an important component of teacher preparation because it allows pre-service teachers to access instructional materials, collaborate with peers, and engage in continuous learning beyond the traditional classroom environment. The Unified Theory of Acceptance and Use of Technology (UTAUT) model is suitable for studying mobile learning adoption (Nwibe & Ogbuanya, 2025) among pre-service teachers because it explains how UTAUT factors influence individuals' acceptance and use of technology.

This study extends the UTAUT model with the information systems success model (system quality, information quality, and service quality) to examine factors influencing pre-service teacher's intentions and usage of mobile learning. UTAUT explains behavioural intentions (Venkatesh et al., 2003), while quality constructs further strengthen motivation to use mobile technologies (DeLone & McLean, 2003). There is an increased intention to continue using mobile learning and an increased performance when users perceive high quality of the technologies, increased quality of the information provided and quality services delivery (Sitar-Taut & Mican, 2021). Morealso, several researches on mobile learning had focused on the area of higher education, pre-school education, undergraduate learning, content delivery (Sophonhiranrak, 2021; Drigas et al., 2016) but little has focused on skilled area of education, technical education or career and technical education. This study therefore focuses on mobile learning adoption among pre-service teachers in technical vocational education and training (TVET).

Theoretical framework and hypotheses

Unified theory of acceptance and use of technology (UTAUT)

Unified theory of acceptance and use of technology (UTAUT) is a derived framework from eight models (Chang, 2012) that describes how people accept and use technology systems (Venkatesh, et al., 2003). UTAUT contained four major constructs that influence usage intentions and actual usage of mobile learning technologies. These constructs are facilitating condition, effort expectancy, performance expectancy and social influence (Venkatesh, et al., 2003). Despite its several applications to information

system, marketing, tourism and purchasing (Venkatesh, et al., 2011; Chang et al., 2016). Therefore, there is need verify its influence on technical vocational education and training (TVET) pre-service teachers in Nigeria.

User's behavior and behavioural intentions

Usage intentions is the "desire or an individual readiness to use certain mobile learning system within specific circumstances" (Hyman et al., 2014). It is a construct in UTAUT that predicts continuous or actual usage of mobile learning technology (Kumar & Bervell, 2019). The behavioural theorists believe that user's behavioural intentions should culminate to user's actual usage of technology devices (Ajzen, 1991; Bandura, 1997). Sometimes, this ideal may not be ascertained, Gollwitzer and Sheeran (2006) argued that intentions may not necessarily guarantee actual behaviour if the person fails to deal with self-regulatory problems. Previous literatures had found significant relationship between intention and actual or continuous usage behaviour (Maican et al., 2018) while some studies found significant relationship between intentions and its antecedents (Ohanu et al., 2023; Kaium et al., 2020)

H1. Intentions to use mobile learning positively influence continuance user's behaviour

Facilitating condition

Facilitating condition is the extent to which a mobile learning user believes that an institution and technical infrastructure exists to enhance system usage, and are typically operationalized to include aspects of the environment that are designed to remove barriers to use (Venkatesh et al., 2003; Tosuntaş et al., 2015). Facilitating condition is also known as perceived behavioural control from decomposed TPB, C-TPB-TAM, MPCU and IDT (Hoi, 2019). Venkatesh et al. (2003) had found facilitating condition to conveniently predict intentions with the exclusion of effort expectancy from the model but Dwivedi et al. (2019) found significance with the relationship between the two constructs in the phase of effort expectancy. Unlike some studies that found an insignificant relationship between facilitating condition and user's behaviour (Botero et al., 2019). Some other literature found a significant relationship between the constructs (Li, et al., 2021; Blaise, et al., 2018). With various in-conclusions in previous literature, it was tentatively proposed that:

H2. Facilitating conditions positively influences user's intentions to use mobile learning.

H3. Facilitating conditions positively influences user's behaviour to continue using mobile learning.

H4. The positive relationship between user's intentions and continuance use behaviour is mediated by facilitating condition.

Social influence

Social influence is the degree to which a person perceives that important people think he or she should use the mobile learning system, similar to subjective norms in C-TPB-TAM (Ho, et al., 2013; Kumar & Bervell, 2019). Users are subjected to the pressures of social interactions and will, in social contexts such as the school environment, colleagues, and so on, considering not only their own perception but also the opinions and perceptions of others, particularly individuals who they consider to be important in the given context (Isaias, et al., 2017). In literature, social influence had been considered to have significant relationship with intentions across various fields of application (Tan, 2013; Isaias et al., 2017) but Tan et al., (2014) findings deviated from the general belief with an insignificant relationship. Beyond the general belief about social influence of mobile learning across culture and region, we propose to validate social influence among pre-service teachers in Nigeria, hence, it was hypothesized that:

H5. Social influence positively influences user's intentions towards mobile learning usage.

Effort expectancy

Effort expectancy is the "degree of ease associated with learner's use of mobile technology devices without much effort" (Venkatesh et al. 2012). It is analogous to perceived ease of use in TAM (Ho, et al., 2013) and it positively influences performance expectancy. When learners feel that mobile technologies are easy to use and do not require much effort, they would have high intentions to use (Tam et al., 2018) and when learners feel difficulty in using mobile technologies, they will have low intention to use (Prasanna and Huggins, 2016). Previous studies found significant relationship between effort expectancy and intentions (Rahi, et al., 2019). Hence in this study, it was hypothesized that:

H6. Effort expectancy positively influences user's intentions towards mobile learning usage.

Performance expectancy

Performance expectancy is the "degree to which an individual believes that using mobile learning devices will enhance learning performance" (Venkatesh, et al. 2003). Performance expectation stirs the belief that using mobile learning devices in teaching and learning activities will improve learner's academic performance. Performance expectancy is defined as the degree to which learner's believes that the perceived usefulness of utilizing a particular mobile technology device will assist in improving his performance (Engotoit et al., 2016). Previous literature had found significant relationship between performance expectancy and intentions among farmers, flight ticket bookings, accountants, and food delivery system (Jeon et al., 2018; Gunden et al, 2020). Hence, it was hypothesized that:

H7. Performance expectancy positively influences user's intentions towards mobile learning usage.

Extended UTAUT with DeLone and McLean quality constructs

The Unified Theory of Acceptance and Use of Technology (UTAUT) explains users' technology adoption through four key constructs: performance expectancy, effort expectancy, social influence, and facilitating conditions (Venkatesh et al., 2003). However, it does not directly address the quality of the technology being adopted (Alazab et al., 2021). The DeLone and McLean information systems success model fills this gap by emphasizing six quality constructs system quality, information quality, service quality, use, user satisfaction, and net benefits (DeLone & McLean, 2003). Integrating these quality constructs into UTAUT provides a more comprehensive explanation of users' adoption and usage behaviour. As shown in Fig. 1, combining both models reveals how quality factors shape users' perceptions related to the core UTAUT constructs.

Service quality

Service quality is the "desirable characteristics of the system outputs; that is, management reports and Web pages. For example: relevance, understandability, accuracy, conciseness, completeness, understandability, currency, timeliness, and usability" (Peter et al., 2008). Gorla, et al., (2010) stated that it is the degree of discrepancy between user's distinct expectations for services and their views of service performance. Mohammadi (2015) stipulated that the service quality influences users' satisfaction and intention to use, leading to enhanced users' usage of the mobile learning technologies. Some previous studies had found a significant relationship between service quality and customer satisfaction and continuance intentions (Oghuma, et al., 2016). Therefore, it was hypothesized that:

H8. Service quality positively influences user's intentions towards mobile learning usage.

Information quality

Information quality is the extent to which information exchange is facilitated by a mobile learning deviceS or the degree of user's evaluation of information sharing in data exchanges (Nicolaou & McKnight, 2006). Information quality is an individual's evaluation of the mobile learning technology performance in providing information based on user's experience of using the devices (Todd & Barbara, 2005). Gu et al. (2007) noted that low quality information confuses because it excites users' search and increases information processing costs. Quality time and resources could be wasted on reading irrelevant or out-of-date posts. This makes information search difficult for users (Zheng et al., 2013). Several previous researches have examined the influence of information quality of a mobile technology on user's satisfaction (Janda et al., 2002; Koivumäki et al., 2008).

H9. Information quality positively influences user's intentions to use mobile learning.

H10. Information quality positively influences user's behaviour to continue using mobile learning.

H11. The positive relationship between user's intentions and continuance use behaviour is mediated by information quality.

System quality

System quality is the degree of functionality of an instructional system (DeLone & McLean, 2003; Ohanu et al., 2022; 2023). It is the “desirable characteristics of an information system, i.e ease of use, system flexibility, system reliability and ease of learning, as well as system features of intuitiveness, sophistication, flexibility and response times” (Peter et al., 2008). It represents the quality of the information system processing itself, which includes software, data and hardware component that measures the extent to which the system is technically sound (Gorla et al., 2010). It is one of the major determiners of the success of information system (DeLone & McLean 1992, 2003). System quality has been applied to improve undergraduate students’ skills, warehousing success, organizational improvement (Ohanu et al., 2022; Gorla, et al., 2010). Hence, it was hypothesized that:

H12. System quality positively influences user’s intentions to use mobile learning.

H13. System quality positively influences user’s behaviour to continue using mobile learning.

H14. The positive relationship between user’s intentions and continuance use behaviour is mediated by system quality.

Methodology

Sample

The study population comprised 1,200 pre-service teachers from three Nigerian universities. Using a stratified sampling technique, 475 valid responses were obtained after removing incomplete, repeated, and atypical questionnaires. Participation was voluntary, as indicated in the consent form. Ethical considerations were strictly observed throughout the study. Participants were adequately informed about the purpose of the research and their right to withdraw at any stage without penalty. Informed consent was obtained before questionnaire administration, and respondents’ anonymity and confidentiality were assured by not collecting personally identifiable information. Questionnaires with missing values were excluded to avoid inaccuracies, resulting in a 95% valid return rate. The demography of the respondents is indicated in Table 1.

Table 1
Demography of Respondents

Variable	Category	Frequency	Percentage (%)
Age (Year)	16–18	56	11.6
	19–21	69	14.7
	22–24	150	31.6
	25–28	170	35.8
	Above 28	30	6.3
Gender	Male	298	62.7
	Female	177	37.3
Level of study	Year 1	161	33.9
	Year 2	87	18.3
	Year 3	80	16.8
	Year 4	147	31.0
Mobile Learning Device	Android Phone	239	50.3
	Laptop	180	37.9
	iPad	56	11.8
Mobile Learning Applications	Zoom	59	12.4
	Google Meet	45	9.5
	Telegram	150	31.6
	WhatsApp	190	40.0
	YouTube	31	6.5

Instrument for data collection

A five-point Likert scale research instrument was collated from several reviewed literature that applied UTAUT to the adoption and utilization of mobile and blended learning tools as shown in Table 2. The constructs used are Performance expectancy with a statement “I find mobile learning useful in my learning”, Effort expectancy (EE) with a statement “I am skillful at using mobile learning”, Social influence (SI) with a statement “People who are important to me think that I should use mobile learning”, Facilitating condition (FC) with a statement “I have the resources necessary to use mobile learning, Intention to use (IU) with a statement “I intend to use mobile learning in the future, Usage behaviour (AU) with a statement “I consider myself a regular user of mobile learning”. System quality (SQ) with a

statement “Mobile learning allows me to have control over my learning actively, Information quality (IQ) with a statement “Mobile learning provides required content and information, Service quality (SEQ) with a statement “Mobile learning application provides learning service anywhere.

Table 2
Instrument

S/N	Construct	Abbreviation	No. of Items	Cronbach’s Alpha (α)	Source
1	Performance Expectancy	PE	4	0.88	Viswanath Venkatesh et al. (2003; 2012)
2	Effort Expectancy	EE	4	0.91	Viswanath Venkatesh et al. (2003; 2012)
3	Social Influence	SI	4	0.82	Viswanath Venkatesh et al. (2003; 2012)
4	Facilitating Conditions	FC	4	0.75	Viswanath Venkatesh et al. (2003; 2012)
5	Intention to Use	IU	4	0.93	Viswanath Venkatesh et al. (2012)
6	Usage Behaviour	AU	4	0.70	Viswanath Venkatesh et al. (2012)
7	System Quality	SQ	7	0.77	William H. DeLone & Ephraim R. McLean (2003); Tarek Alsabawy et al. (2016)
8	Information Quality	IQ	6	0.93	William H. DeLone & Ephraim R. McLean (2003); Tarek Alsabawy et al. (2016)
9	Service Quality	SEQ	4	0.91	William H. DeLone & Ephraim R. McLean (2003); Tarek Alsabawy et al. (2016)

Data analysis

The hypotheses were evaluated using confirmatory and exploratory factor analysis through the structural equation modelling partial least squares (SEM-PLS) approach, implemented in SmartPLS 3.0 (Ringle et al., 2015). This method is appropriate for testing causal effects, predicting relationships, and validating theoretical frameworks. In the model, system, information, and service quality, along with performance expectancy, effort expectancy, social influence, and facilitating conditions, were treated as predictors of behavioural intention. In the second stage, system quality, information quality, and facilitating conditions served as predictors of use behaviour, meeting the requirements for establishing cause-and-effect relationships (Sánchez-Franco et al., 2014). Convergent validity was assessed using factor loadings, composite reliability (CR), and average variance extracted (AVE). Factor loadings above 0.70 are

acceptable. Composite reliability exceeded 0.70, and AVE was above 0.50 (Hair Jr. et al., 2014). The rho_A was determined following Dijkstra &Henseler's (2015) approach as shown in Table 3.

Table 3
Cross loadings, Reliabilities and Validities of the constructs

Constructs		Factor loadings	Composite Reliability	Average Variance Extracted	Discriminant Validity	rho_A	Cronbach's Alpha
Effort Expectancies	**EE1**	*0.879*	0.915	0.781	0.884	1.027	0.872
	EE3	*0.845*					
	EE4	*0.926*					
Faciliatating Conditions	**FC2**	*0.942*	0.936	0.879	0.938	0.865	0.863
	FC3	*0.933*					
Information Quality	**IQ2**	*0.814*	0.918	0.736	0.858	0.900	0.881
	IQ3	*0.902*					
	IQ4	*0.870*					
	IQ5	*0.843*					
Intention to Use	**IU2**	*0.965*	0.913	0.840	0.916	1.087	0.826
	IU3	*0.865*					
Performance Expectation	**PE1**	*0.957*	0.898	0.748	0.865	0.719	0.887
	PE2	*0.916*					
	PE3	*0.701*					
Service Quality	**SEQ1**	*0.892*	0.895	0.809	0.900	0.768	0.765
	SEQ2	*0.907*					
Social Influence	**SI2**	*0.877*	0.902	0.821	0.906	0.837	0.787
	SI3	*0.935*					
System Quality	**SQ1**	*0.989*	0.887	0.799	0.894	2.351	0.815
	SQ2	*0.787*					
Use Behaviour	**AU1**	*0.866*	0.892	0.735	0.857	0.841	0.821
	AU2	*0.898*					
	AU3	*0.804*					

Findings and results

Measurement and model testing

To ascertain the validity and reliability of the instrument, the factor loading exceeded the threshold, Cronbach alpha measurement exceeded 0.50, composite reliability exceeded 0.7 with C.R range from 0.887–0.936 and average variance extracted exceeded 0.50 as indicated in Fig. 2. Composite reliability is adequate with an average variance extracted of 0.5 (Hair Jr. et al., 2014). Rho_A should be greater than 0.7 (Dijkstra &Henseler's 2015).

Table 4
Heterotrait-Monotrait Ratio (HTMT)

Constructs	1	2	3	4	5	6	6	7	8
Effort Expectancies									
Facilitating Condition	0.040								
Information Quality	0.030	0.064							
Intention to use	0.042	0.147	0.027						
Performance Expectation	0.510	0.066	0.036	0.042					
Service Quality	0.116	0.110	0.213	0.084	0.083				
Social Influence	0.035	0.107	0.090	0.091	0.058	0.030			
System Quality	0.067	0.034	0.101	0.051	0.024	0.023	0.133		
Use Behaviour	0.046	0.105	0.455	0.051	0.025	0.057	0.064	0.149	

The discriminant validity of the instrument was confirmed as the square root of the average variance extracted exceeded the cross-loadings of the correlation matrix (Lowry & Gaskin, 2014), as shown in Table 4, and further supported through the Heterotrait-Monotrait Ratio (HTMT). Following the recommended HTMT threshold of 0.90 (Teo et al., 2008), the values presented in Table 2 were all below this limit, indicating satisfactory discriminant validity.

Table 5

Effect size (f^2) and Collinearity test (VIF)

Hyp	Path	Effect size (f^2)	Collinearity test (VIF)	Decision
1	Int. to use -> Use behaviour	0.011	1.018	Small effect
2	Facil. cond. -> Int. to use	0.022	1.027	Small effect
3	Facil. cond. -> Use behaviour	0.016	1.020	Small effect
4	Social infl. -> Int. to use	0.012	1.020	Small effect
5	Effort exp. -> int. to use	0.020	1.218	Small effect
6	Perform. exp. -> Int. to use	0.011	1.212	Small effect
7	Service qual. -> Int. to use	0.018	1.056	Small effect
8	Inform. qual. -> Int. to use	0.012	1.053	Small effect
9	Inform. qual. -> Use behaviour	0.179	1.011	Medium effect
10	System qual. -> Int. to use	0.010	1.017	Small effect
11	System qual. -> Use behaviour	0.020	1.009	Small effect

In addition, the lateral collinearity test (VIF), which measures the correlational significance between independent variables showed values ranging from 1.02 to 1.21, well below the 3.3 threshold suggested by Cenfetelli and Bassellier (2009), confirming the absence of multicollinearity (Hair Jr et al., 2014).

The coefficient of determination (R^2) for the endogenous variables was 0.039 for intention to use and 0.178 for usage behaviour (Nitzl, 2016), indicating modest explanatory power. Effect size (f^2) analysis, using thresholds of 0.02 (small), 0.15 (medium), and 0.35 (large) (Hair Jr et al., 2014) in Table 5, revealed that the exogenous variables exerted small effects on their corresponding endogenous constructs, except for information quality, which demonstrated a medium effect on usage behaviour. The predictive relevance of the model, assessed using cross-validated redundancy (Q^2), showed values greater than zero, 0.015 for intention to use and 0.121 for usage behaviour indicating that the model possesses adequate predictive capability (Sarstedt et al., 2014).

Reflective-Formative Measurement Model Assessment

The reflective–formative measurement model presented in Fig. 3 and Table 6 evaluates the extended Unified Theory of Acceptance and Use of Technology (UTAUT) framework. The results indicate that information quality and system quality demonstrate statistically significant relationships with the higher-order construct. Specifically, information quality exhibits a strong positive outer loading (β = 0.911), accompanied by a substantial outer weight and a highly significant t-value, confirming its robustness as a key formative indicator. In contrast, system quality shows a negative outer loading (β = −0.274) but

retains a positive outer weight and a statistically significant t-value, suggesting a complex but meaningful contribution to the construct.

Conversely, effort expectancy, performance expectancy, social influence, facilitating conditions, and service quality display relatively low outer loadings and weights, with non-significant t-values. This indicates that these indicators contribute less substantially to the formative construct within the current model context.

To assess potential multicollinearity issues, a lateral collinearity test was conducted. The variance inflation factor (VIF) values ranged from 1.017 to 1.218, which are well below the recommended threshold of 3.3 (Hair et al., 2014), confirming the absence of lateral multicollinearity concerns among the formative indicators.

Furthermore, the discriminant validity of the model was evaluated using the Fornell–Larcker criterion. The results demonstrate that the square root of the average variance extracted (AVE) for intention to use (0.903) and use behaviour (0.857) exceeds the inter-construct correlations, thereby establishing adequate discriminant validity.

Table 6
Formative measurement model

Construct	Items	Scale	Weight	Loadings	t-values	VIF
Extended UTAUT	**Effort expectancy**	Formative	0.475	0.051	0.459	1.218
	Facilitating condition		1.317	0.163	1.228	1.027
	Information quality		5.541	0.911	14.639*	1.053
	Performance expectation		0.570	-0.065	0.601	1.212
	Service quality		0.241	-0.026	0.225	1.056
	Social influence		0.678	-0.083	0.685	1.020
	System quality		2.302	-0.274	2.650*	1.017
• Indicates a significant t-value						

Predictive Relevance and Model Performance (PLSpredict)

The predictive performance of the model was assessed using the PLSpredict procedure, following the guidelines of Shmueli et al. (2019). A 10-fold cross-validation procedure (K = 10) with 10 repetitions (r = 10) was employed to ensure robustness of the prediction results.

Model predictive accuracy was evaluated using Root Mean Squared Error (RMSE), Mean Absolute Error (MAE), and Mean Absolute Percentage Error (MAPE), where lower values indicate higher predictive accuracy. Additionally, Q^2_predict values were examined to compare the predictive performance of the PLS-SEM model against a naïve linear regression (LM) benchmark.

The results in Table 7 indicate that the PLS-SEM model generally demonstrates superior predictive performance, as evidenced by lower RMSE and MAE values relative to the linear regression benchmark across most indicators. Although some Q^2_predict values are marginal or slightly negative, the overall pattern suggests that the model achieves acceptable to high predictive relevance, particularly for use behaviour indicators.

Importantly, a positive Q^2_predict value implies that the prediction error of the PLS-SEM model is lower than that of the naïve benchmark model. In this study, the predominance of lower prediction errors in the PLS-SEM model confirms its strong out-of-sample predictive capability, thereby supporting the robustness and practical applicability of the extended UTAUT framework.

Table 7
Manifest variable (MV) prediction

Composite	Indicator	RMSE	MAE	MAPE	Q2	RMSE	MAE	MAPE	Q2
		PLS-SEM model				Linear regression model			
Intention to use	IU3	0.948	0.753	24.234	-0.004	0.953	0.766	24.535	-0.013
	IU2	0.969	0.789	24.661	-0.006	0.976	0.792	24.327	0.021
Use behaviour	AU3	1.133	0.918	40.682	0.071	1.149	0.934	40.788	0.074
	AU2	1.132	0.911	43.621	0.094	1.161	0.934	43.671	0.096
	AU1	1.136	0.943	43.116	0.152	1.155	0.957	42.178	0.155

Hypothesis testing

The estimates used in the study allowed the acceptance or rejection of the hypotheses with a direct effect measure of the constructs using the bootstrapping method. With a t–values 1.96 and p–values 0.05, the hypothesis is accepted. Figure 2 and Table 8 indicate through the outer loadings and model path coefficient that eight out of the eleven hypotheses measuring direct relationship have significant relationship with their dependent variables, hence were accepted.

Mediation effect

In a mediation analysis, a statistically significant indirect effect is considered as an acceptable mediation effect between the constructs (Preacher & Hayes, 2004). Also, if the confidence interval for the indirect

effect based on 5000 bootstrapping samples, does not straddle a zero in between, this supports the presence of mediation effect and vice versa (Memon et al., 2018). In Table 8, the hypotheses stating the indirect relationship between the constructs were rejected.

Discussion

This study applied UTAUT to examine mobile learning adoption among pre-service teachers in Nigerian universities. The findings show that several conditions must be in place for mobile learning to effectively support teaching and learning, yet Nigeria's developmental challenges hinder its adoption. To address this, the study evaluated students' exposure to facilitating conditions, expectancies (performance and effort), and quality factors (system, information, and service) to understand how these shape their intentions and continued use of mobile learning for better academic performance.

The result reveals that intentions to use mobile learning have a negative but significant influence on users' continuance behaviour, thus supporting hypothesis H1. This suggests that while learners may initially intend to use mobile learning, certain factors such as usability challenges, system

Table 8
Result of the direct effect and mediating effect of the constructs

Hyp	Path	Coefficient	Std error	Confidence interval		t-Values	P-Values	Decision
				2.5%	97.5%			
1	**Intention. to use -> Use behaviour**	-0.030	0.044	-0.117	0.055	1.987	0.007	Accepted
2	**Facilitating cond. -> Intention to use**	0.146	0.047	0.054	0.242	3.106	0.002	Accepted
3	**Facilitating cond. -> Use behaviour**	0.070	0.043	-0.018	0.149	1.645	0.101	Rejected
5	**Social influence -> Intention to use**	-0.108	0.051	-0.196	0.029	2.109	0.035	Accepted
6	**Effort expectancy -> Intention to use**	-0.012	0.062	-0.124	0.114	0.193	0.847	Rejected
7	**Performance expectancy -> Intention to use**	-0.028	0.012	-0.132	0.134	2.253	0.008	Accepted
8	**Service quality -> Intention to use**	0.093	0.047	-0.025	0.183	1.968	0.040	Accepted
9	**Inform. quality -> Intention to use**	-0.046	0.014	-0.130	0.049	3.246	0.000	Accepted
10	**Inform. quality-> Use behaviour**	0.386	0.040	0.308	0.461	9.657	0.000	Accepted
12	**System quality -> Intention to use**	0.028	0.056	-0.109	0.116	0.497	0.619	Rejected
13	**System quality -> Use behaviour**	-0.112	0.043	-0.196	-0.032	2.625	0.009	Accepted
	Mediating effect of the constructs							
4	**Facilitating cond. -> Intention to use -> Use behavour**	-0.004	0.007	-0.02	0.008	0.635	0.526	Rejected

Hyp	Path	Coefficient	Std error	Confidence interval		t-Values	P-Values	Decision
				2.5%	97.5%			
11	**Inform. quality -> Intention to use -> Use behavior**	0.001	0.003	-0.003	0.009	0.446	0.655	Rejected
14	**System quality -> Intention to use -> Use behavior**	-0.001	0.003	-0.007	0.006	0.275	0.783	Rejected
R^2 = Intention to use – 0.039; Use behaviour – 0.178; Q^2 = Intention to use – 0.015; Use behavour – 0.121								

fatigue, or unmet expectations may lead to a decline in continued use over time. Nonetheless, the significant relationship aligns with previous findings (Hoi, 2019; Tosuntas et al., 2015), which confirm that behavioural intention remains a strong predictor of usage behaviour. As Botero et al. (2019) noted, when mobile learning technologies are effectively integrated into teaching and learning, they can enhance engagement and sustain users' participation indicating that improving the quality and relevance of mobile learning experiences is essential for maintaining continued use.

The result indicates that facilitating conditions have a positive and significant influence on learners' intentions to use mobile learning, thereby supporting hypothesis H2. This implies that when learners perceive that sufficient technical infrastructure, institutional support, and necessary resources are available, they are more likely to adopt and continue using mobile learning platforms. This finding aligns with previous studies (Teo, 2011; Venkatesh et al., 2003; He & Wei, 2007), which emphasize that perceived availability, accessibility, and timeliness of support systems strengthen learners' confidence and motivation to use mobile technologies for learning. Essentially, conducive facilitating conditions reduce perceived barriers and enhance learners' readiness to integrate mobile learning into their educational activities.

There is no significant influence between facilitating conditions and users' continuance behaviour toward mobile learning; therefore, H3 is rejected. This suggests that conditions shaping intentions do not always translate into actual behaviour. The result contrasts with earlier studies reporting a significant relationship (Prasad et al., 2018). Kumar and Bervell (2019), Sultana (2020), and Yadegaridehkordi et al. (2020), noted that the insignificant relationship may stem from learners being required to use mobile learning regardless of available support such as internet access or technical assistance. This finding implies that when mobile learning becomes mandatory, students may continue using it even without strong institutional or infrastructural support, and that their behaviour may be driven more by internal motivation and perceived usefulness than by external facilitating conditions.

The result yielded a negative and non-significant mediating influence of facilitating conditions on the relationship between user's intentions and continuance use behaviour. This result does not allow H4 to be accepted. The insignificant mediating effect occurs when users perceive that the system is very useful and easy to use, even when the external conditions are less than optimal (Chawla & Joshi, 2020; Sitar-Tăut, 2021). This suggests that once learners are convinced of the usefulness and ease of mobile learning technologies, their intentions and behaviour may become less dependent on infrastructural support or institutional provisions. In such situations, intrinsic motivation and perceived system value may override the absence of strong facilitating conditions. However, this does not diminish the relevance of facilitating conditions in general, as they may still play a more decisive role in contexts where students are less confident in their abilities or where system usability is more complex.

The findings show a negative but significant influence of social influence on pre-service teachers intentions to use mobile learning; thus, H5 is accepted. This aligns with prior studies (Yadegaridehkordi et al., 2020; Madan & Yadav, 2016), which demonstrate that learners' intentions are shaped by the social structures around them. Tan and Teo (2000) also noted that friends, peers, family, and other referents can influence learners' adoption decisions, as users may develop stronger intentions when considering others' expectations (Venkatesh & Morris, 2000). In this study, the negative direction may reflect cultural or institutional contexts where external pressure leads to resistance rather than motivation. This suggests that while social influence remains important, its effect can vary depending on social norms, peer dynamics, and the broader educational culture surrounding technology adoption.

Effort expectancy has a negative and insignificant influence on users' intentions to use mobile learning; thus, H6 is rejected. The insignificant effect may stem from challenges associated with adopting mobile learning, such as infrastructural deficits, institutional policy constraints, and limited pedagogical capacity for mobile-based instruction (Madan & Yadav, 2016). Also, anti-mobile phone sentiments and concerns about distraction while technical limitations such as low processing power, small screens, limited storage, and short battery life further complicate usage (Joo et al., 2016). These barriers may overshadow perceived ease of use, reducing the influence of effort expectancy on intention. The findings suggest that without addressing infrastructural and design issues, students may not view mobile learning as convenient or effortless despite its academic potential.

Performance expectancy significantly influence user's intentions to use mobile learning yielded a negative but significant relationship. This is an indication that H7 is accepted. The result of the study is line with the belief that the usefulness or crops of benefit accrued from system usage towards performing a task influences the user's intention toward continuous usage (Venkatesh et al., 2003). This implies that quality academic performance is a major goal for learners and they perceive that mobile learning technologies would enhance these goals (Abbad 2021). The finding further suggests that when students strongly believe mobile learning contributes to efficiency, knowledge acquisition, and improved outcomes, their motivation to sustain its use becomes stronger. In other words, any gap between expected performance benefits and actual learning outcomes may create dissatisfaction, reinforcing the importance of aligning system features with learners' academic needs. Thus, performance expectancy

remains a central driver of behavioural intention, especially in educational contexts where achievement is highly valued

The service quality and user's intentions to use mobile learning yielded a positive and significant relationship. This is an indication that quality service delivery is paramount and shapes certain human activities with the intentions to behave in certain ways. Hence H8 is accepted. The result is consistent with previous literatures that found significant relationship between system quality and continuance intentions (Oghuma, et al., 2016). In this situation, the quality of service delivered by technology devices will influence user's intention to adopt and continued usage for better performance (DeLone & McLean, 2003). Moreover, timely responsiveness, technical support, and overall reliability of service features can enhance users' confidence and satisfaction, thereby strengthening their intention to continue engaging with mobile learning. This further suggests that sustained adoption is not only a matter of system or information quality but also depends heavily on the perceived dependability and effectiveness of the services that support the technology.

The result of the findings indicated that the quality nature of information received and presented by technology devices (mobile learning devices) towards lesson delivery will negatively influence user's intentions to continue using mobile learning. Hence, H9 is accepted. This result of the findings relied on previous literature with a significant relationship between information quality and intentions to use (Wu & Zhang, 2014). This is an indication that an improvement in the information quality of mobile technology devices increases user's intention to use. Furthermore, when learners perceive the information as accurate, comprehensive, and aligned with their learning needs, they are more inclined to adopt and sustain the use of such technologies. Conversely, insufficient, outdated, or poorly structured content can discourage learners from continued engagement, thereby weakening their intention to use mobile learning. Thus, sufficient and updated information provided by the technology device will definitely result in enhancing learner's behavioural intention (Ramayah et al., 2010).

Information quality has positive and significant relationship on user's behaviour to continue to use mobile learning. Hence, H10 is accepted. This is an indication that quality information in a large extent can influence certain human behaviour to a large extent (Mohammadi, 2015). The result signifies that the provision of complete, sufficient and supporting learning contents on mobile learning application will enhance continuous use behaviour of mobile learning devices (Almaiah & Alismaiel, 2018). Arain et al. (2019) identified organizing informative workshop and seminar to educate learners as a potent tool to stimulate the learner's adoption and usage of mobile learning devices. This finding further implies that when students perceive the information provided as accurate, up-to-date, and relevant to their academic and practical needs, they are more likely to remain committed to using mobile learning. It also highlights the centrality of content quality in shaping learner trust and satisfaction, which ultimately translates into sustained engagement with mobile learning platforms.

Information quality has a positive but insignificant mediating effect on the relationship between users' intentions and continuance use behaviour; therefore, H11 is rejected. Unlike previous studies, this result suggests a contradictory view on the mediating role of information system quality in linking user intention

and usage behaviour (Zheng et al., 2013). It indicates that while the quality of information may shape initial perceptions, it does not necessarily sustain intentions or continuance behaviour. This may be due to other underlying factors, such as satisfaction with the system (Liang et al., 2011). Additionally, students may consider information quality a baseline expectation rather than a decisive factor, making continuance behaviour more influenced by motivational constructs like performance expectancy, social influence, or facilitating conditions.

System quality has a positive but not significant influence on intentions to use mobile learning. Therefore, H12 is rejected. The result is consistent with the findings of Kaium et al. (2020) among mHealth users but inconsistent with the general belief on the significance of the two constructs (Mohammadi, 2015). This outcome may be attributed to challenges such as new system interfaces and poor screen visibility (Joo et al., 2016), which limit students' ability to fully engage with the technology. In addition, many students may prioritize the relevance and accuracy of information over the technical features of the system, thereby reducing the weight of system quality in shaping their behavioural intentions. It is also possible that infrastructural barriers, such as unstable power supply or limited internet connectivity, further dilute the perceived importance of system quality, as external factors overshadow system-related functionalities.

System quality negatively influenced user's behaviour to continue to use mobile learning despite a significant relationship with their intention to use. Hence, H13 is accepted. The result of the finding coincides with the findings of Lin (2007) whose study found significant relationship between system quality and actual usage. This is an indication that access, convenience, reliability and ease of use will influence learners to exhibit adequate user's behaviour (Ho et al., 2013). Almaiah and Alismaiel, (2018) explained that mobile learning technologies allow teaching and learning flexibility and most especially quality interactions between the learners. Since information sharing is flexible among the learners, they perceive ease of use of mobile learning technologies.

System quality does not mediate the positive relationship between user's intentions and continuance use behaviour. Therefore, H14 is rejected. The result obtained from this study is in contrary with the suggestion from literatures where the mediation effects of quality dimensions have significant influence on other variable (Arain, et al., 2019; Taqdees, et al., 2023). The insignificant mediating effect may be as a result of the stronger significant influence by other contingent variables. The result indicate that students place greater emphasis on the reliability and accuracy of learning content rather than the underlying system features, most especially in technical vocational education and training where practical based learning outcomes are prioritized. This finding suggests that while system quality remains relevant, it may not serve as a decisive mechanism through which intentions are translated into actual usage, particularly when other constructs demonstrate stronger predictive power.

Implications of the study

The findings of this study offer significant theoretical and practical implications within the framework of the Unified Theory of Acceptance and Use of Technology (UTAUT) and the context of mobile learning

adoption in technical vocational education and training. Theoretically, the study reaffirms UTAUT's explanatory strength by showing that key constructs (performance expectancy, effort expectancy, social influence, and facilitating conditions) significantly influence behavioural intention and actual usage of mobile learning among pre-service teachers, thereby validating the model's applicability to a domain that has received limited attention. It further reveals that the influence of UTAUT constructs is context-dependent, with performance expectancy and social influence exerting stronger effects than effort expectancy, while also confirming that behavioural intention reliably predicts actual usage in developing countries with infrastructural challenges. Practically, the study underscores the need to enhance system quality and information quality in mobile learning technologies, ensuring that devices are durable, efficient, user-friendly, and supported with accurate, clear, and relevant content. Administrators and educational institutions should develop strategies that promote effective integration of mobile learning into the curriculum, maintain robust and user-friendly systems, provide continuous training for facilitators, and ensure stable internet connectivity, reliable power supply, and a supportive learning environment. Workshops, training sessions, and the use of social networking applications can further strengthen students' engagement and adoption, while ongoing capacity building for education practitioners remains essential for maximizing the pedagogical potential of mobile learning in Nigerian universities.

Conclusion

This study provides valuable insights into the adoption and use of mobile learning technologies among pre-service teachers in Nigerian universities, demonstrating through an extended Unified Theory of Acceptance and Use of Technology (UTAUT) model that behavioural intention remains a strong determinant of actual usage, while information quality and system quality add significant explanatory power. The findings confirm that students' decisions to adopt mobile learning are shaped not only by perceptions of usefulness, ease of use, social influence, and facilitating conditions, but also by the quality of information and system support embedded in the platforms. Beyond validating UTAUT in technical vocational education and training, the study underscores the need to address contextual realities such as infrastructure deficits, institutional support, and pedagogical design to ensure sustainable mobile learning adoption. The results highlight that the effectiveness of mobile learning hinges on balancing motivational factors with the quality dimensions of the technology itself, positioning mobile learning as a potentially transformative tool for teaching and learning provided that institutions and policymakers invest in the necessary infrastructure, training, and system design.

Limitation of the study

Although this study provides useful insights into mobile learning adoption among pre-service teachers in technical vocational education and training, it is not without limitations. The study was conducted within selected Nigerian universities, and as such, the findings may not be fully generalizable to other disciplines, institutions, or countries with different technological infrastructures and educational systems. In addition, the study employed a cross-sectional survey design, which captures students' perceptions and behaviour at a single point in time. This limits the ability to examine changes in adoption behaviour

over time or to establish stronger causal inferences between the UTAUT constructs and actual mobile learning usage. Furthermore, the study relied on self-reported data, which may be subject to response biases such as social desirability or overestimation of usage behaviour. Despite these limitations, the study offers a strong basis for understanding the predictors of mobile learning adoption in technical and vocational education and provides directions for future research.

Declarations

Disclosure statement

The authors report there are no competing interests to declare

Ethical statement

The research protocol for this study was approved by the Research Ethics Committee of Yaba College of Technology in accordance with institutional ethical guidelines and national regulations for research involving human participants. The study was carried out following the approved guidelines and in compliance with the principles of the 1964 Declaration of Helsinki to ensure ethical standards in participant recruitment, informed consent, confidentiality, and data handling. All participants voluntarily consented to take part in the study, and their anonymity and rights were fully protected throughout the research process.

Consent to participate

Informed consent to participate in this study was obtained from all participant prior to data collection. Participation was voluntary, and respondents were adequately informed about the purpose of the study, their right to withdraw at any time without penalty, and the confidentiality of their responses.

Consent to publish

Informed consent to publish was obtained from all participants involved in the study. Participants were informed that the data collected would be used strictly for academic and publication purposes, and no personally identifiable information would be disclosed in any form.

Funding

The authors declared that the research received no funding

Author Contribution

R.O - Data curation and data collectionO.T - Wrote the initial manuscriptO.A - Data analysisA.T - Conceptual and Theoretical modelsAll authors reviewed the manuscript

Acknowledgement

I appreciate all the research assistance engaged in this study

Data Availability

The data associated to this research study is available on reasonable request from the corresponding author.

References

1. Abbad MMM. Using the UTAUT model to understand students' usage of e-learning systems in developing countries. Educ Inform Technol. 2021;26:7205–24. https://doi.org/10.1007/s10639-021-10573-5.
2. Ajzen I. The theory of planned behavior. Organ Behav Hum Decis Process. 1991;50(2):179–211. https://doi.org/10.1016/0749-5978(91)90020-T.
3. Alazab M, Alhyari S, Awajan A, Abdallah AB. Blockchain technology in supply chain management: an empirical study of the factors affecting user adoption/acceptance. Cluster Comput. 2021;24:83–101. https://doi.org/10.1007/s10586-020-03200-4.
4. Al-Emran M, Elsherif HM, Shaalan K. Investigating attitudes towards the use of mobile learning in higher education. Comput Hum Behav. 2016;56:93–102. https://doi.org/10.1016/j.chb.2015.11.033.
5. Alleyne P, Lavine M. Factors influencing accountants' behavioural intentions to use and actual usage of enterprise resource planning systems in a global development agency. J Financial Report Acc. 2013;11(2):179–200. https://doi.org/10.1108/JFRA-11-2011-0017.
6. Almaiah MA, Alismaiel OA. 2018. Examination of factors influencing the use of mobile learning system: An empirical study. *Education and Information*, 24, pp.885–909 *Technologies*. https://doi.org/10.1007/s10639-018-9810-7
7. Al-Mushasha N, Nassuora AB. Factors determining e-learning service quality in Jordanian higher education environment. J Appl Sci. 2012;12(14):1474–80. https://doi.org/10.3923/jas.2012.1474.1480.
8. Amadin FI, Obienu AC, Osaseri RO. Main barriers and possible enablers of Google apps for education adoption among university staff members. Nigerian J Technol. 2018;37(2):432–9. https://doi.org/10.4314/njt.v37i2.18.
9. Arain AA, Hussain Z, Rizvi WH, Vighio MS. Extending UTAUT 2 toward acceptance of mobile learning in the context of higher education. Univ Access Inf Soc. 2019. https://doi.org/10.1007/s10209-019-00685-8.

10. Attewell J, Savill-Smith C. Mobile learning and social inclusion: Focusing on learners and learning. In: Attewell J, Savill-Smith C, editors. Learning with mobile devices: Research and development. Shaftesbury, Dorset: Blackmore Ltd.; 2004. pp. 3–11.
11. Badwelan A, Drew S, Bahaddad AA. Towards acceptance of m-learning approach in higher education in Saudi Arabia. Int J Bus Manage. 2016;11(8):12. https://doi.org/10.5539/ijbm.v11n8p12.
12. Bandura A. Self-efficacy: The exercise of control. New York: W. H. Freeman, Times book, Henry Holt & Co; 1997.
13. Biddix JP, Chung CJ, Park HW. Convenience or credibility? A study of college student research behaviors. Internet High Educ. 2011;14(3):175–82. https://doi.org/10.1016/j.iheduc.2011.01.003.
14. Blaise R, Halloran M, Muchnick M. Mobile commerce competitive advantage: A quantitative study of variables that predict m-commerce purchase intentions. J Internet Commer. 2018;17(2):96–114. https://doi.org/10.1080/15332861.2018.1433911.
15. Botero GG, Questier F, Cincinnato S, He T, Zhu C. Acceptance and usage of mobile-assisted language learning by higher education students. J Comput High Educ. 2019;30(3):426–51. https://doi.org/10.1007/s12528-018-9177-1.
16. Bull S, Reid E. Individualised revision material for use on a handheld computer. In: Attewell J, Savill-Smith C, editors. Learning with mobile devices: Research and development. Shaftesbury, Dorset: Blackmore Ltd.; 2004. pp. 35–42.
17. Byrne BM. Structural Equation Modeling with AMOS: Basic Concepts, Applications, and Programming. Mahwah, NJ: Lawrence Erlbaum Associates; 2001.
18. Cenfetelli RT, Bassellier G. 2009. Interpretations of formative measurement in information systems research. *MIS Quarterly*, 33(4), pp.689–728. https://doi.org/20650323.
19. Chang A. UTAUT and UTAUT 2: A review and agenda for future research. Winners. 2012;13(2):106–14. https://doi.org/10.21512/tw.v13i2.656.
20. Chang HH, Fu CS, Jain HT. Modifying UTAUT and innovation diffusion theory to reveal online shopping behavior: Familiarity and perceived risk as mediators. Inform Dev. 2016;32(5):1757–73. https://doi.org/10.1177/0266666915623317.
21. Chawla D, Joshi H. 2020. Role of mediator in examining the influence of antecedents of mobile wallet adoption on attitude and intention. *Global Business Review.* 24(4), pp. 609–625. https://doi.org/0972150920924506.
22. Chen J-L. The effects of education compatibility and technological expectancy on e-learning acceptance. Comput Educ. 2011;57(2):1501–11. https://doi.org/10.1016/j.compedu.2011.02.009.
23. Chen SC, Jong D, Lai MT. Assessing the relationship between technology readiness and continuance intention in an e-appointment system: relationship quality as a mediator. J Med Syst. 2014;38(76):1–12. https://doi.org/10.1007/s10916-014-0076-3.
24. Cheng S-L, Dissertation MS. The University of North Carolina at Chapel Hill, USA.
25. Cheng Y-M. Effects of quality antecedents on e-learning acceptance. Internet Res. 2012;22(3):361–90. https://doi.org/10.1108/10662241211235699.

26. Cheon J, Lee S, Crooks SM, Song J. An investigation of mobile learning readiness in higher education based on the theory of planned behaviour. Comput Educ. 2012;59:1054–64. https://doi.org/10.1016/j.compedu.2012.04.015.
27. Cheung R, Vogel D. Predicting user acceptance of collaborative technologies: an extension of the technology acceptance model for e-learning. Comput Educ. 2013;63:160–75. https://doi.org/10.1016/j.compedu.2012.12.003.
28. Chow AS. One educational technology colleague's journey from dotcom leadership to university e-learning systems leadership: merging design principles. systemic change Leadersh Think TechTrends. 2013;57(5):64–73. https://doi.org/10.1007/s11528-013-0693-6.
29. Crompton H, Burke D. The use of mobile learning in higher education: a systematic review. Comput Educ. 2018;123:53–64. https://doi.org/10.1016/j.compedu.2018.04.007.
30. Crompton H. 2013. A historical overview of mobile learning: toward learner-centered education. In: Berge, Z.L. & Muilenburg, L, editors, Handbook of Mobile Learning, pp. 3–14.
31. Dassa L, Vaughan M. Class again? How education faculty engage the disengaged college student. Clearing House: J Educational Strategies Issues Ideas. 2018;91(1):42–5. https://doi.org/10.1080/00098655.2017.1342434.
32. DeLone WH, McLean ER. Information system success: the quest for the dependent variable. J Manage Inform Syst. 1992;3(4):60–95. https://doi.org/10.1287/isre.3.1.60.
33. DeLone WH, McLean ER. The DeLone and McLean model of information systems success: a ten-year update. J Manage Inform Syst. 2003;19(4):9–30. https://doi.org/10.1080/07421222.2003.11045748.
34. DeLone WH, McLean ER. Measuring e-commerce success: applying the DeLone & McLean information systems success model. Int J Electron Commer. 2004;9(1):31–47. https://doi.org/10.1080/10864415.2004.11044317.
35. Dijkstra TK, Henseler J. Consistent and asymptotically normal PLS estimators for linear structural equations. Comput Stat Data Anal. 2015a;81(2):10–23. https://doi.org/10.1016/j.csda.2014.07.008.
36. Draper NR, Smith H. 2003. Applied regression analysis, 3rd edition, Wiley.
37. Drigas A, Kokkakua G, Economou A. Mobile learning for pre-school education. Int J Interact Mob Technol. 2016;10(4):57–64. https://doi.org/10.3991/ijim.v10i4.6021.
38. Dwivedi YK, Rana NP, Jeyaraj A, Clement M, Williams MD. Re-examining the unified theory of acceptance and use of technology (UTAUT): towards a revised theoretical model. Inform Syst Front. 2019;21:719–34. https://doi.org/10.1007/s10796-017-9774-y.
39. Dykes G, Knight H. 2012. Mobile learning for teachers in Europe: exploring the potential of mobile technologies to support teachers and improve practices. UNESCO Working Paper Series on Mobile Learning, France.
40. Engotoit B, Kituyi GM, Moya MB. Influence of performance expectancy on commercial farmers' intention to use mobile-based communication technologies for agricultural market information dissemination in Uganda. J Syst Inform Technol. 2016;18(4):346–63. https://doi.org/10.1108/JSIT-06-2016-0037.

41. Escobar-Rodriguez T, Trujillo EC. Online purchasing tickets for low cost carriers: an application of the unified theory of acceptance and use of technology (UTAUT) model. Tour Manag. 2014;43:70–88. https://doi.org/10.1016/j.tourman.2014.01.017.
42. Fornell C, Larcker DF. Evaluating structural equation models with unobservable variables and measurement error. J Mark Res. 1981;18(1):39–50. https://doi.org/10.1177/002224378101800104.
43. Gefen D, Straub D, Boudreau M-C. Structural equation modeling and regression: guidelines for research practice. Communication Association Inform Syst. 2000;4(7). https://doi.org/10.17705/1CAIS.00407.
44. Gollwitzer PM, Sheeran P. Implementation intentions and goal achievement: a meta-analysis of effects and processes. Adv Exp Soc Psychol. 2006;38:69–119. https://doi.org/10.1016/S0065-2601(06)38002-1.
45. Gorla N, Somer TM, Wong B. Organizational impact of system quality, information quality and service quality. J Strateg Inf Syst. 2010;19(3):207–28. https://doi.org/10.1016/j.jsis.2010.05.001.
46. Gu B, Konana P, Rajagopalan B, Chen HM. Competition among virtual communities and user valuation: the case of investing-related communities. Inform Syst Res. 2007;18(1):68–85. https://doi.org/10.1287/isre.1070.0114.
47. Gunden N, Morosan C, DeFranco A. Consumers' intentions to use online food delivery systems in the USA. Int J Contemp Hospitality Manage. 2020;32(2):1325–45. https://doi.org/10.1108/IJCHM-06-2019-0595.
48. Hair JF Jr., Sarstedt M, Hopkins L, Kuppelwieser GV. Partial least square structural equation modeling (PLS-SEM): an emerging tool in business research. Eur Bus Rev. 2014;26(2):106–21. https://doi.org/10.1108/EBR-10-2013-0128.
49. Hair JF, Black WC, Babin BJ, Anderson RE. Multivariate data analysis. Upper Saddle River, NJ: Prentice-Hall; 2009.
50. Hamdi H, Chavoshi A. Analysis of the essential factors for the adoption of mobile learning in higher education: a case study of students of the University of Technology. Telematics Inform. 2018;35:1053–70. http://doi.org/10.1016/j.tele.2017.09.016.
51. Hassan WU, Nawaz MT, Syed TH, Arfeen MI, Naseem A, Noor S. Investigating students' behavioral intention towards adoption of mobile learning in higher education institutions of Pakistan. University of Engineering and Technology Taxila. Tech J. 2015;20(3):34.
52. He W, Wei KK. What drives continued knowledge sharing? An investigation of knowledge-contribution and-seeking beliefs. Decis Support Syst. 2009;46(4):826–38. https://doi.org/10.1016/j.dss.2008.11.007.
53. Henseler J, Ringle CM, Sarstedt M. A new criterion for assessing discriminant validity in variance-based structural equation modeling. J Acad Mark Sci. 2015;43:115–35. https://doi.org/10.1007/s11747-014-0403-8.
54. Hine N, Rentoul R, Specht M. Collaboration and roles in remote field trips. In: Attewell J, Savill-Smith C, editors. Learning with mobile devices: Research and development. Shaftesbury, Dorset: Blackmore

Ltd; 2004. pp. 69–72.

55. Ho L-A, Kuo T-H, Lin B. The mediating effect of website quality on Internet searching behavior. Comput Hum Behav. 2012;28(3):840–8. https://doi.org/10.1016/j.chb.2011.11.024.
56. Ho L-H, Hung C-L, Chen H-C. Using theoretical models to examine the acceptance behavior of mobile phone messaging to enhance parent–teacher interactions. Comput Educ. 2013;61:105–14. https://doi.org/10.1016/j.compedu.2012.09.009.
57. Hoi VN. Understanding higher education learners' acceptance and use of mobile devices for language learning: A Rasch-based path modeling approach. Comput Educ. 2019. https://doi.org/10.1016/j.compedu.2019.103761.
58. Hoppe HU, Joiner R, Milrad M, Sharples M. Guest editorial: Wireless and mobile technologies in education. J Comput Assist Learn. 2003;19(3):255–9. https://doi.org/10.1046/j.0266-4909.2003.00027.x.
59. Huan Y, Li X, Aydeniz M, Wyatt T. Mobile learning adoption: an empirical investigation for engineering education. Int J Eng Educ. 2015;31(4):1081–91.
60. Hyman JA, Moser MT, Segala LN. Electronic reading and digital library technologies: understanding learner expectation and usage intent for mobile learning. Education Tech Research Dev. 2014;62(1):35–42. https://doi.org/10.1007/s11423-013-9330-5.
61. Isaias P, Reis F, Coutinho C, Lencastre JA. Empathic technologies for distance/mobile learning: An empirical research based on the unified theory of acceptance and use of technology (UTAUT). Interact Technol Smart Educ. 2017;14(2):159–80. https://doi.org/10.1108/ITSE-02-2017-0014.
62. Janda S, Trocchia PJ, Gwinner KP. Consumer perceptions of internet retail quality. Int J Serv Ind Manag. 2002;13(5):412–31. https://doi.org/10.1108/09564230210447913.
63. Jeon H-M, Ali F, Lee S-W. Determinants of consumers' intentions to use smartphones apps for flight ticket bookings. Serv Ind J. 2018;39(5–6):385–402. https://doi.org/10.1080/02642069.2018.1437908.
64. Joo YJ, Kim N, Kim NH. Factors predicting online university students' use of a mobile learning management system (m-LMS). Education Tech Research Dev. 2016;64:1–20. https://doi.org/10.1007/s11423-016-9436-7.
65. Kabra G, Ramesh A, Akhtar P, Dash MK. Understanding behavioural intention to use information technology: Insights from humanitarian practitioners. Telematics Inform. 2017;34(7):1250–61. https://doi.org/10.1016/j.tele.2017.05.010.
66. Kaium MA, Bao Y, Alam MZ, Hoque MR. Understanding continuance usage intention of mHealth in a developing country. Int J Pharm Healthc Mark. 2020;14(2):251–72. https://doi.org/10.1108/ijphm-06-2019-0041.
67. Kaliisa R, Palmer E, Miller J. Mobile learning in higher education: A comparative analysis of developed and developing country contexts. Br J Edu Technol. 2017;50(2):546–61. https://doi.org/10.1111/bjet.12583.

68. Kim K-H, Kim K-J, Lee D-H, Kim M-G. Identification of critical quality dimensions for continuance intention in mHealth services: Case study of onecare service. Int J Inf Manag. 2019;46:187–97. https://doi.org/10.1016/j.ijinfomgt.2018.12.008.
69. Kock N, Lynn G. Lateral collinearity and misleading results in variance-based SEM: An illustration and recommendation. J Association Inform Syst. 2012;13(7):546–80. https://doi.org/10.17705.1jais.00302.
70. Koivumäki T, Ristola A, Kesti M. The effects of information quality of mobile information services on user satisfaction and service acceptance–empirical evidence from Finland. Behav Inform Technol. 2008;27(5):375–85. https://doi.org/10.1080/01449290601177003.
71. Kukulska-Hulme A. Mobile, wearable, companionable: Emerging technological challenges and incentives for learning. In: Amelia A, Carvahlo, Cruz S, Marques CG, Moura A, Santos I, editors. Atos do Segundo Encontro sobre Jogos e Mobile Learning. Coimbra, Portugal: Centro de Investigacao em Educacao; 2014. pp. 12–5.
72. Kumar, Bervell. Google classroom for mobile learning in higher education: Modelling the initial perceptions of students. Educ Inform Technol. 2019;24:1793–817. https://doi.org/10.1007/s10639-018-09858-z.
73. Kuo C-W, Tang M-L. Relationship among service quality, corporate image, customer satisfaction and behavioural intentions for the elderly in high speed rail services. J Adv Transp. 2013;47(5):512–25. https://doi.org/10.1002/atr.179.
74. Kuo YC, Kuo YT. Preservice teachers' mobile learning experience: An exploratory study of iPad-enhanced collaborative learning. J Digit Learn Teacher Educ. 2020;36(2):111–23. https://doi.org/10.1080/21532974.2020.1719380.
75. Landrum H, Prybutok VR, Zhang X. A comparison of Magal's service quality instrument with SERVPERF. Inform Manage. 2007;44(1):104–13. https://doi.org/10.1016/j.im.2006.11.002.
76. Li W, Yuan K, Yue M, Zhang L, Huang F. Climate change risk perceptions, facilitating conditions and health risk management intentions: Evidence from farmers in rural China. Clim Risk Manage. 2021;32:100283. https://doi.org/10.1016/j.crm.2021.100283.
77. Liang T-P, Ho Y-T, Li Y-W, Turban E. What Drives Social Commerce: The Role of Social Support and Relationship Quality. Int J Electron Commer. 2011;16(2):69–90. https://doi.org/10.2753/jec1086-4415160204.
78. Lin H. The impact of website quality dimensions on customer satisfaction in the B2C E-commerce context. Total Qual Manage Bus Excellence. 2007;18:363–78. https://doi.org/10.1080/147833607012313.
79. Lowry PB, Gaskin J. Partial least squares (PLS) structural equation modeling (SEM) for building and testing behavioral causal theory: When to choose it and how to use it. IEEE Trans Prof Commun. 2014;57(2):123–46. https://doi.org/10.1002/asi.20670.
80. Madan K, Yadav R. Behavioural intentions to adopt mobile wallet: a developing country perspective. J Indian Bus Res. 2016;8(3):227–44. https://doi.org/10.1108/JIBR-10.

81. Mahat J, Ayub AFM, Wong SL. An assessment of student's mobile self-efficacy, readiness and personal innovativeness towards mobile learning in higher education in Malaysia. Procedia-Social Behav Sci. 2012;64:284–90. https://doi.org/10.1016/j.sbspro.2012.11.033.
82. Maican C, Cazan A-M, Lixandroiu R, Dovleac L. A study on academic staff personality and technology acceptance: The case of communication and collaboration applications. Comput Educ. 2018;128:113–31. https://doi.org/10.1016/j.compedu.2018.09.010.
83. Mansour EA. Use of smartphone apps among library and information science students at South Valley University, Egypt. Electron Libr. 2016;34:371–404. https://doi.org/10.1108/EL-03-2015-0044.
84. Mohammadi H. Social and individual antecedents of m-learning adoption in Iran. Comput Hum Behav. 2015;49:191–207. https://doi.org/10.1016/j.chb.2015.03.006.
85. Namdeo SK, Rout SD. Calculating and interpreting Cronbach's alpha using Rosenberg assessment scale on pediatrician's attitude and perception on self-esteem. Int J Community Med Public Health. 2016;3(6):1371–4. https://doi.org/10.18203/2394-6040.ijcmph20161448.
86. Nelson RR, Todd PA, Barbara HW. Antecedents of information and system quality: An empirical examination within the context of data warehousing. J Manage Inform Syst. 2005;21(4):99–236. https://doi.org/10.1080/07421222.2005.11045823.
87. Neuman LW. Social Research Methods. Istanbul: Yayın Odası; 2007.
88. Nguyen SO, Habok A. Designing and validating the learner autonomy perception questionnaire. Heliyon. 2021;7:e06831. https://doi.org/10.1016/j.heliyon.2021.e06831.
89. Nicolaou AI, McKnight DH. Perceived information quality in data exchanges: Effects on risk, trust, and intention to use. Inform Syst Res. 2006;17(4):332–51. https://doi.org/10.1287/isre.1060.0103.
90. Nitzl C. The use of partial least squares structural equation modelling (PLS-SEM) in management accounting research: Directions for future theory development. J Acc Literature. 2016;37:19–35.
91. Nitzl C. The use of partial least squares structural equation modelling (PLS-SEM) in management accounting research: Directions for future theory development. J Acc Literature. 2016;37:19–35. https://doi.org/10.1016/j.acclit.2016.09.003.
92. Oberer B, Erkollar A. Mobile learning in higher education: A marketing course design project in Austria. Procedia - Social Behav Sci. 2013;93:2125–9. https://doi.org/10.1016/j.sbspro.2013.10.177.
93. Ogbuanya TC, Shodipe OT. Workplace learning for pre-service teachers' practice and quality teaching and learning in technical vocational education and training: key to professional development. J Workplace Learn. 2022;34(4):327–51. https://doi.org/10.1108/JWL-02-2021-0015.
94. Oghuma AP, Libaque-Saenz CF, Wong SF, Chang Y. An expectation-confirmation model of continuance intention to use mobile instant messaging. Telematics Inform. 2016;33(1):34–47. https://doi.org/10.1016/j.tele.2015.05.006.
95. Ohanu IB, Shodipe TO, Ohanu CM-G, Anene-Okeakwa JE. System quality, technology acceptance model and theory of planned behaviour models: Agents for adopting blended learning tools. E-Learning Digit Media. 2023;20(3):255–81. https://doi.org/10.1177/20427530221108031.

96. Ohanu IB, Shodipe TO, Ohanu CM-G, Anene-Okeakwa JE. (2022). Quality blended learning systems for improving undergraduate students skills. Quality Assurance in Education. 30(2), 169–183. https://doi.org/10/1108/QAE-08-2021-0132.
97. Ohanu IB, Chukwuone CA. Constraints to the use of online platform for teaching and learning technical education in developing countries. Educ Inform Technol. 2018;23(6):3029–45. https://doi.org/10.1007/s10639-018-9757-8.
98. Okolie UC, Igwe PA, Elom EN. Improving graduate outcomes for technical colleges in Nigeria. Australian J Career Dev. 2019;28(1):21–30. https://doi.org/10.1177/1038416218772189.
99. Osborne J, Overbay A. Best practices in data cleaning: How outliers and fringeliers can increase error rates and decrease the quality and precision of your results. In: Osborne JW, editor. Best practices quantitative methods. Thousand Oaks, CA: Sage; 2008. pp. 205–13.
100. Peter S, DeLone W, McLean E. Measuring information systems models, dimensions, measures and interrelationships. Eur J Inform Syst. 2008;17:236–63. https://doi.org/10.1057/ejis.2008.15.
101. Pituch KA, Lee Y-K. The influence of system characteristics on e-learning use. Comput Educ. 2006;47(2):222–44. https://doi.org/10.1016/j.compedu.2004.10.007.
102. Prasad PWC, Maag A, Redestowicz M, Hoe LS. Unfamiliar technology: Reaction of international students to blended learning. Comput Educ. 2018. https://doi.org/10.1016/j.compedu.2018.03.016.
103. Prasanna R, Huggins TJ. Factors affecting the acceptance of information systems supporting emergency operations centres. Comput Hum Behav. 2016;57:168–81. https://doi.org/10.1016/j.chb.2015.12.013.
104. Rahi S, Othman-Mansour MM, Alghizzawi M, Alnaser FM. Integrating UTAUT model in internet banking adoption context: The mediating role of performance expectancy and effort expectancy. J Res Interact Mark. 2019;13(3):411–35. https://doi.org/10.1108/JRIM-02-2018-0032.
105. Ramayah T, Ahmad NH, Lo M-C. The role of quality factors in intention to continue using an e-learning system in Malaysia. Procedia - Social Behav Sci. 2010;2(2):5422–6. https://doi.org/10.1016/j.sbspro.2010.03.885.
106. Ramli A, Ismail I, Idrus RM. Mobile learning via SMS among distance learners: Does learning transfer occur? Int J Interact Mob Technol. 2010;4(3):30–5.
107. Raza SA, Shah N, Ali M. Acceptance of mobile banking in Islamic banks: evidence from modified UTAUT mode. J Islamic Mark. 2019;10(1):357–76. https://doi.org/10.1108/JIMA-04-2017-0038.
108. Rigdon EE. In: Garson GD, editor. Re: Defending PLS over covariance – based SEM, Communication to the SEMNET discussion list, semnet@listserv.ua.edu. Partial Least Squares: Regression and Structural Equation Models, Statistical Associates Publishing; 2014.
109. Ringle CM, Wende S, Becker J-M. SmartPLS 3. Boenningstedt: SmartPLS GmbH; 2015. http://www.smartpls.com.
110. Sambasivan M, Patrick-Wemyss G, Che-Rose R. User acceptance of a G2B system: a case of electronic procurement system in Malaysia. Internet Res. 2010;20(2):169–87. https://doi.org/10.1108/10662241011032236.

111. Sánchez-Franco MJ, Peral-Peral B, Villarejo-Ramos AF. User's intrinsic and extrinsic drivers to use a web-based educational environment. Comput Educ. 2014;74:81–97. https://doi.org/10.1016/j.compedu.2014.02.001.
112. Sanchez-Olivia D, Sanchez-Miguel PA, Leo FM, Kinnafick F-E, Garcia-Calvo TG. Physical education lessons and physical activity. Intentions within Spanish secondary schools: A self-determination perspective. J Teach Phys Educ. 2014;33(2):232–49. https://doi.org/10.1123/jtpe.2013-0043.
113. Sarstedt M, Ringle CM, Smith D, Reams R, Hair JF. Partial least squares structural equation modeling (PLS-SEM): A useful tool for family business researchers. J Family Bus Strategy. 2014;5(1):105–15. https://doi.org/10.1016/j.jfbs.2014.01.002.
114. Shmueli G, Sarstedt M, Hair JF, Cheah J-H, Ting H, Vaithilingam S, Ringle CM. Predictive model assessment in PLS-SEM: Guidelines for using PLSpredict. Eur J Mark. 2019;53(11):2322–47. https://doi.org/10.1108/EJM-02-2019-0189.
115. Shodipe OT, Ogbuanya CT. Building aspiring teachers' capabilities, professional and skill development: Auspice to quality teaching practice in technical vocational education and training institutions. Eur J Educ. 2024;59:e12677. https://doi.org/10.1111/ejed.12677.
116. Shodipe TO, Ohanu IB. Electrical/electronics technology education teachers attitude, engagement, and disposition towards actual usage of Mobile learning in higher institutions. Educ Inf Technol. 2021;26:1023–42. https://doi.org/10.1007/s10639-020-10297-y.
117. Sitar-Taut DA, Mican D. Mobile learning acceptance and use in higher education during social distancing circumstances: An expansion and customization of UTAUT2. Online Inf Rev. 2021;45(5):1000–19. https://doi.org/10.1108/OIR-01-2021-0017.
118. Sitar-Tăut DA. Mobile learning acceptance in social distancing during the COVID-19 outbreak: The mediation effect of hedonic motivation. Hum Behav Emerg Technol. 2021;3(3):366–78. https://doi.org/10.1002/hbe2.261.
119. Sophonhiranrak S. Features, barriers and influencing factors of mobile learning in education: a systematic review. Heliyon. 2021;7:e06696. https://doi.org/10.1016/j.heliyon.2021.e06696.
120. Stockwell G. Using mobile phones for vocabulary activities: Examining the effect of platform. Lang Learn Technol. 2010;14(2):95–110.
121. Sultana J. Determining the factors that affect the uses of mobile cloud learning (MCL) platform blackboard – A modification of the UTAUT model. Educ Inform Technol. 2020;25:223–38. https://doi.org/10.1007/s10639-019-09969-1.
122. Tam C, Oliveira T. Understanding the impact of m-banking on individual performance: DeLone and McLean and TTF perspective. Comput Hum Behav. 2016;61:233–44. https://doi.org/10.1016/j.chb.2016.03.016.
123. Tam C, Santos D, Oliveira T. Exploring the influential factors of continuance intention to use mobile Apps: Extending the expectation confirmation model. Inform Syst Front. 2018;22(2):243–57. https://doi.org/10.1007/s10796-018-9864-5.

124. Tan GW-H, Ooi K-B, Leong L-Y, Lin B. Predicting the drivers of behavioural intention to use mobile learning: A hybrid SEM-Neural network approach. Computers Hum Behav. 2014;36:198–213. https://doi.org/10.1016/j.chb.2014.03.052.
125. Tan M, Teo TSH. Factors influencing the adoption of internet banking. Int J Electron Commer. 2000;1(1):1–42. https://doi.org/10.1080/10864415.1998.11518312.
126. Tan PJB. 2013. Applying the UTAUT to understand factors affecting the use of English e-learning websites in Taiwan'. SAGE Open, pp. 1–12.
127. Taqdees F, BingXiang L, Shahab AM, Dan Z. 2023. Mapping the relationship between virtual supervision, online program quality, and international student satisfaction in COVID-19 pandemic World: does e-learning quality mediates the relationship', *Interactive Learning Environments*, pp. 1–17. https://doi.org/10.1080/10494820.2023.2177677
128. Teo T. Factors influencing teachers' intention to use technology: Model development and test. Comput Educ. 2011;57:2432–40. https://doi.org/10.1016/j.compedu.2011.06.008.
129. Teo TSH, Srivastava SC, Jiang L. Trust and electronic government success: an empirical study. J Manage Inform Syst. 2008;25(3):99–132. https://doi.org/10.2753/MIS0742-1222250303.
130. Thomas K, O'Bannon B. Cell Phones in the Classroom: Preservice Teachers' Perceptions. J Digit Learn Teacher Educ. 2013;30(1):11–20. https://doi.org/10.1080/21532974.2013.10784721.
131. Tosuntas SB, Karadag E, Orhan S. The factors affecting acceptance and use of interactive whiteboard within the scope of FATIH project: A structural equation model based on the Unified Theory of acceptance and use of technology. Comput Educ. 2015;81:169–78. https://doi.org/10.1016/j.compedu.2014.10.009.
132. Türel YK. An interactive whiteboard student survey: development, validity and reliability. Comput Educ. 2011;57(4):2441–50. https://doi.org/10.1016/j.compedu.2011.07.005.
133. Uzunboylu H, Cavus N, Ercag E. Using mobile learning to increase environmental awareness. Comput Educ. 2009;52(2):381–9. https://doi.org/10.1016/j.compedu.2008.09.008.
134. Venkatesh V, Morris MG. Why don't men ever stop to ask for directions? Gender, social influence, and their role in technology acceptance and usage behaviour. MIS Q. 2000;24:115–39. https://doi.org/10.2307/3250981.
135. Venkatesh V, Morris MG, Davis GB, Davis FD. User acceptance of information technology: Toward a unified view. MIS Q. 2003;27:425–78. https://doi.org/10.2307/30036540.
136. Venkatesh V, Thong JYL, Xu X. Consumer acceptance and use of information technology: Extending the Unified Theory of Acceptance and Use of Technology. MIS Q. 2012;36(1):157–78. https://doi.org/10.2307/41410412.
137. Venkatesh V, Thong JYL, Chan KY, Hu PJ-H, Brown SA. Extending the two-stage information systems continuance model: Incorporating UTAUT predictors and the role of context. Inform Syst J. 2011;21(6):527–55. https://doi.org/10.1111/j.1365-2575.2011.00373.x.
138. Wixon BH, Watson HJ. An empirical investigation of the factors affecting data warehousing success. MIS Q. 2001;25(1):17–41. https://doi.org/10.2307/3250957.

139. Wu B, Zhang C. Empirical study on continuance intentions towards E-Learning 2.0 systems. Behav Inform Technol. 2014;33(10):1027–38. https://doi.org/10.1080/0144929X.2014.934291.
140. Yadegaridehkordi E, Nilashi M, Shuib L, Samad S. A behavioural intention model for SaaS-based collaboration services in higher education. Educ Inform Technol. 2020;25:791–816. https://doi.org/10.1007/s10639-019-09993-1.
141. Ye J, Zheng J, Yi F. A study on users' willingness to accept mobility as a service based on UTAUT model. Technol Forecast Soc Chang. 2020;157:120066. https://doi.org/10.1016/j.techfore.2020.120066.
142. Zheng Y, Zhao K, Stylianou A. The impacts of information quality and system quality on users' continuance intention in information-exchange virtual communities: An empirical investigation. Decis Support Syst. 2013;56:513–24. https://doi.org/10.1016/j.dss.2012.11.008.
143. Zhou M, Huang J, Wu K, Huang X, Kong N, Campy KS. Characterizing Chinese consumers' intention to use live e-commerce shopping. Technol Soc. 2021;67:101767. https://doi.org/10.1016/j.techsoc.2021.101767.

Figures

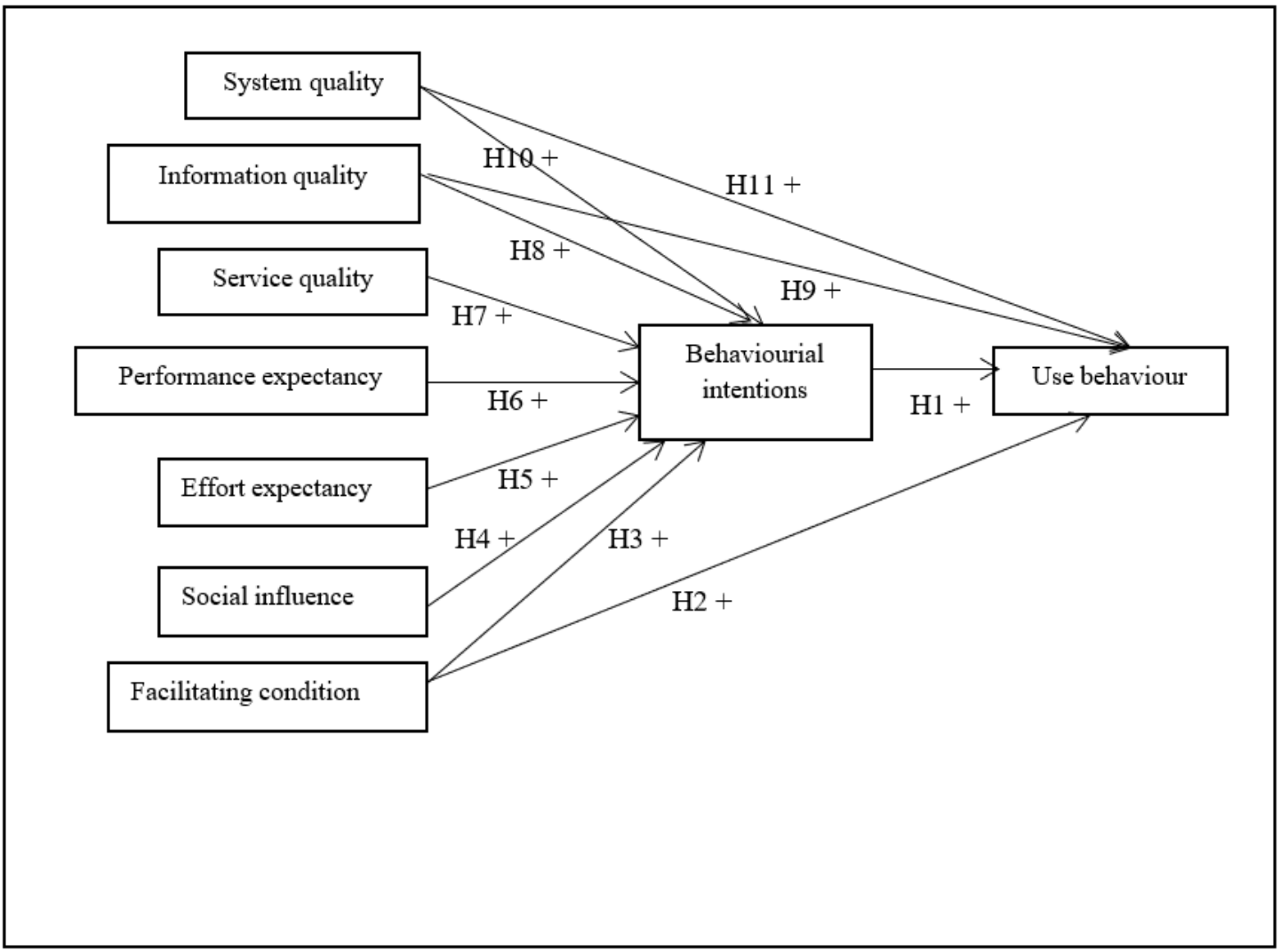

Figure 1

Theoretical framework and hypotheses formulation

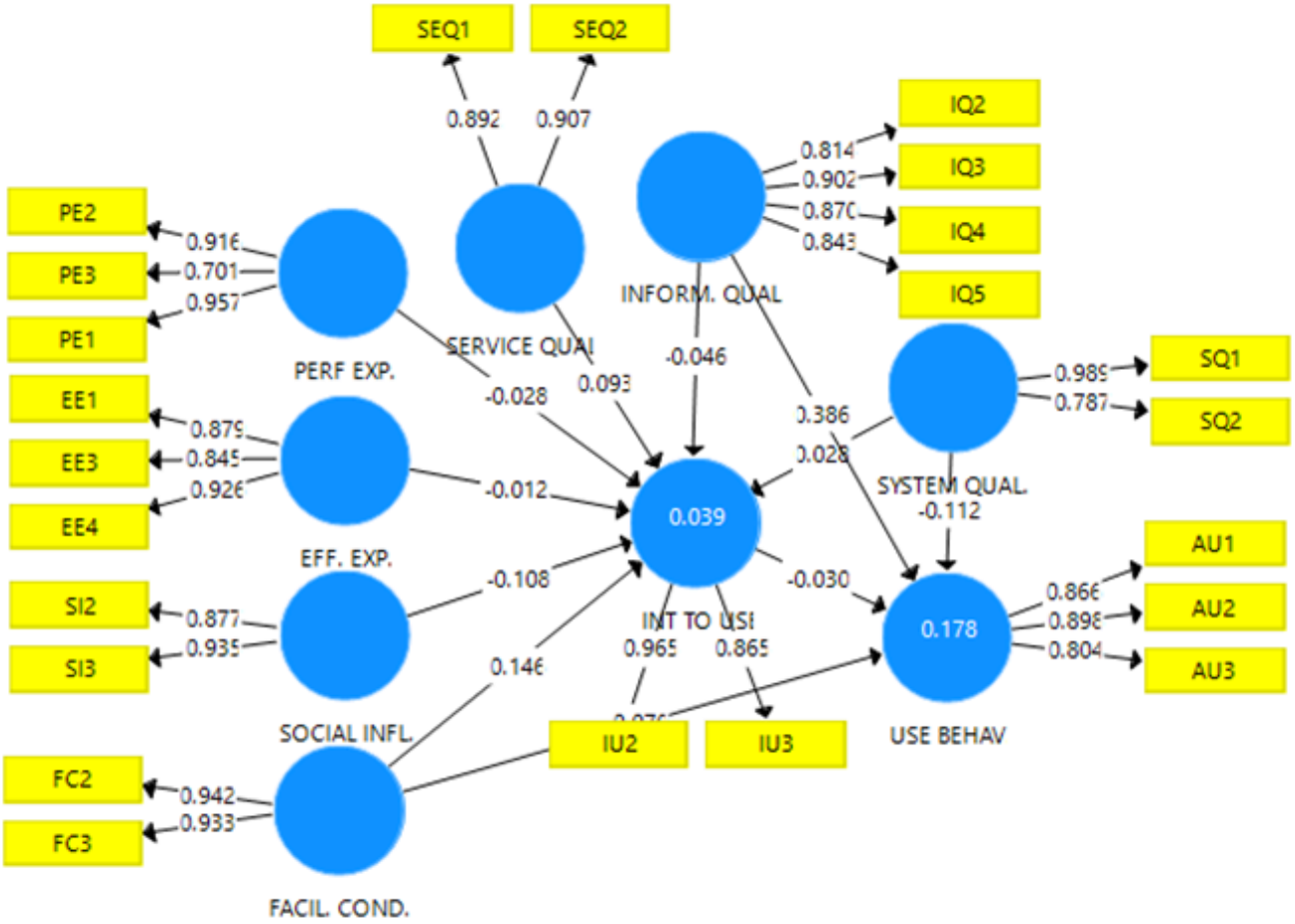

Figure 2

Outer loading and model path coefficient

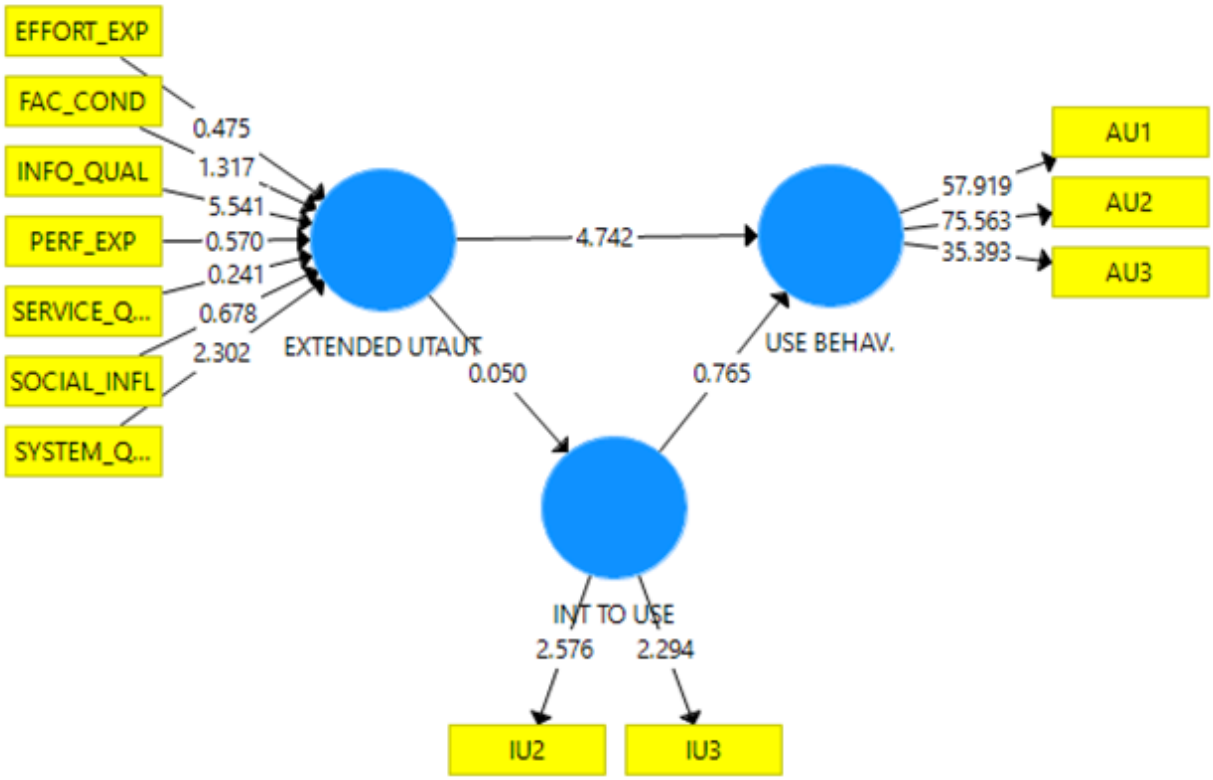

Figure 3

Reflective-Formative model path