Research Square

Preprints are preliminary reports that have not undergone peer review.
They should not be considered conclusive, used to inform clinical practice,
or referenced by the media as validated information.

Mechanisms and Cost-Effectiveness of Mobile Phone-Based Tele-Support Psychotherapy Delivered by Lay Counselors for Depression Among Youth in Uganda: Secondary Analyses of a Pilot Randomized Controlled Trial

Etheldreda Nakimuli-Mpungu

etheldreda.nakimuli@lshtm.ac.uk

Medical Research Council, Uganda Virus Research Institute and London School of Hygiene and Tropical Medicine (MRC/UVRI/ LSHTM) Research Unit, Entebbe, Uganda https://orcid.org/0000-0001-6857-8931

John Mark Bwanika

Africa Centre for Applied Digital Health (CADH), Kampala, Uganda. https://orcid.org/0000-0002-6745-1274

Davis Musinguzi

Africa Centre for Applied Digital Health (CADH), Kampala, Uganda.

Jeremiah Mutinye Kwesiga

Medical Research Council, Uganda Virus Research Institute and London School of Hygiene and Tropical Medicine (MRC/UVRI/ LSHTM) Research Unit, Entebbe, Uganda https://orcid.org/0000-0001-5507-1664

Kizito Wamala

Department of Mental Health, School of Psychology, Makerere University, Kampala, Uganda
https://orcid.org/0000-0003-4800-7052

Justine Diana Namuli

Department of Psychiatry, College of Health Sciences, Makerere University, Kampala, Uganda

Benedict Akimana

Butabika National Referral Mental Hospital, Ministry of Health of Uganda, Kampala, Uganda
https://orcid.org/0000-0001-8522-1440

Sabrina Bakeera Kitaka

Department of Pediatrics, College of Health Sciences, Makerere University, Kampala, Uganda
https://orcid.org/0000-0003-2724-8287

Chrispus Mayora

Department of Health Policy Planning and Management, School of Public Health, Makerere University, Kampala, Uganda

Perez Ochanda

Department of Health Policy Planning and Management, School of Public Health, Makerere University, Kampala, Uganda

Freddie Ssengooba

Department of Health Policy Planning and Management, School of Public Health, Makerere University, Kampala, Uganda

Charlotte Hawkins
University College London, London, United Kingdom https://orcid.org/0000-0001-5581-152X
Patricia Cavazos-Rheg
Washington University, School of Medicine in St Louis, USA https://orcid.org/0000-0003-3352-1198
Moffat Nyirendi
Medical Research Council, Uganda Virus Research Institute and London School of Hygiene and Tropical Medicine (MRC/UVRI/ LSHTM) Research Unit, Entebbe, Uganda https://orcid.org/0000-0003-2120-4806
Musisi Seggane
Department of Psychiatry, College of Health Sciences, Makerere University, Kampala, Uganda
Jean B Nachega
Departments of Epidemiology, University of Pittsburgh Graduate School of Public Health, Pittsburgh, USA https://orcid.org/0000-0002-2862-4443
Edward J Mills
Department of Clinical Epidemiology & Biostatistics, McMaster University, Hamilton, ON, Canada https://orcid.org/0000-0003-3120-9694

Research Article

Keywords: Randomized controlled trial, tele-support psychotherapy, depression, Covid-19, youth, Uganda.

Posted Date: July 17th, 2025

DOI: https://doi.org/10.21203/rs.3.rs-7136584/v1

License: This work is licensed under a Creative Commons Attribution 4.0 International License. Read Full License

Additional Declarations: The authors declare no competing interests.

Abstract

Background: Depression is a critical public health issue among youth in Uganda, with limited access to mental health services. This pilot randomized controlled trial (RCT) evaluated the mechanisms and cost-effectiveness of mobile phone-based Tele-Support Psychotherapy (TSP) delivered by lay counselors for youth with depression in Kampala.
Methods: We randomized 300 youth aged 15–30 with mild to moderate depression to TSP combined with Standard Mental Health Services (SMHS) or SMHS alone. Assessments at baseline, 6, and 12 months measured depression (Mini International Neuropsychiatric Interview), stigma, and income generation. Generalized structural equation modeling (GSEM) explored mediation pathways, and a provider-perspective cost-effectiveness analysis calculated the incremental cost-effectiveness ratio (ICER) using disability-adjusted life years (DALYs).
Results: TSP significantly reduced depression through stigma reduction and increased income generation (total effect $\beta = -3.736$, $p<0.001$, 95% CI [-4.273, -3.198]). The ICER was US$2,293 per DALY averted, cost-effective compared to Uganda's GDP per capita (US$1,002).
Conclusions: TSP is an effective and cost-effective intervention for youth depression in low-resource settings, with potential for integration into national mental health strategies.

Trial Registration: PACTR202201684613316.

Introduction

Youth depression represents a critical public health issue in Uganda, particularly among marginalized groups in urban settings such as Kampala. Recent studies have highlighted alarmingly high rates of depression among these vulnerable populations. For example, approximately 32.2% of young women in Kampala reported experiencing depression most or all of the time within the past 30 days (1). Among urban refugee and displaced adolescent girls and young women in Kampala, depression prevalence reaches as high as 75% (2).

Even among lower-risk school-going adolescents in Kampala, 26.6% showed depressive symptoms within clinical ranges, with increased vulnerability observed among girls and adolescents living without parental support (3). Additionally, probable depression rates among young women engaging in risky behaviours in Kampala have been estimated at 56% (4). Chronic socioeconomic and interpersonal stressors—including financial hardship, academic pressures, substance abuse, family adversity, and pervasive social stigma—significantly increase the risk of depression within this demographic (5).

Social stigma, particularly when associated with low income, can exacerbate feelings of shame and isolation, further hindering income generation and perpetuating a cycle of

poverty (6). Poverty itself is a critical determinant of mental health, creating chronic stress, limiting access to resources, and imposing systemic barriers to care (7). Despite the clear need for mental health services, access remains limited due to structural, personal, and social barriers (8, 9). There is an urgent and critical need for innovative and scalable interventions tailored to local contexts.

Tele-Support Psychotherapy (TSP) has emerged as a highly accessible, mobile-phone-based adaptation of Uganda's proven Group Support Psychotherapy (10, 11), significantly expanding access to effective mental health care among underserved populations. TSP integrates cognitive-behavioural therapy principles with the sustainable livelihood framework, using culturally relevant methods such as storytelling and metaphors to facilitate emotional

expression and the learning of positive coping skills. TSP also incorporates an economic empowerment module, guiding participants in basic livelihood skills and income-generating activities, thereby addressing both psychological and socio-economic stressors simultaneously (12).

A pilot randomized controlled trial recently assessed the feasibility, acceptability, and effectiveness of TSP among youth aged 15–30 years in Kampala, comparing TSP combined with Standard Mental Health Services (SMHS) against SMHS alone (Nakimuli-Mpungu et al., 2025a). Results demonstrated that TSP was highly feasible, engaging, and effective in significantly reducing depressive symptoms over 12 months. Youth who participated in TSP showed marked improvements compared to those receiving only standard care (12).

Building upon these promising outcomes, this study aimed to conduct an in-depth secondary analysis to elucidate the specific mechanisms through which TSP reduces depressive symptoms. We hypothesized that stigma reduction and improvements in engagement in productive economic activities mediate the positive impact of TSP on depression. Additionally, we conducted a cost-effectiveness analysis comparing the delivery of TSP via mobile phones with standard care alone (SMHS only) to deliver mental health services, providing critical insights to decision-makers on the value of resources for implementing TSP as a scalable public health intervention.

This research represents one of the first detailed evaluations of a mobile phone-based psychotherapy intervention in a low-resource setting, examining the mechanisms that drive its effectiveness and its economic implications. Findings from this study have the potential to significantly advance global mental health efforts by demonstrating how culturally adapted, digitally delivered psychotherapy can effectively bridge treatment gaps for vulnerable youth populations.

Methods

Study design and participants

The detailed protocol for this study has been published previously (13). We conducted a pilot randomized controlled trial (RCT) with two parallel treatment groups, comparing Tele-Support Psychotherapy (TSP) delivered via mobile phones, combined with Standard Mental Health Services (SMHS), versus SMHS alone. Assessments were conducted at baseline, 6 months, and 12 months, with 6 months designated as the primary outcome evaluation point for depression. Ethical approval was obtained from the Makerere University School of Health Sciences Research Ethics Committee, and the trial was registered with the Pan African Clinical Trials Registry (PACTR202201684613316). No changes were made to the trial design after commencement. All participants provided written informed consent before participation. This study is reported in accordance with the Consolidated Standards of Reporting Trials (CONSORT) guidelines for randomized controlled trials and the Consolidated Health Economic Evaluation Reporting Standards (CHEERS) guidelines for economic evaluations (14, 15).

Participants were recruited from three urban slum communities in Kampala District, Uganda: Kamwokya, Naguru, and Makerere. Eligible participants were youth aged 15–30 years with mild to moderate depression, resident in these areas, possessing a mobile phone, and fluent in Luganda or English. Youth aged 15–17 classified as mature or emancipated minors were included, while individuals with significant mental or physical disabilities (Karnofsky performance scale < 50%) were excluded.

Sample Size

As a pilot randomized controlled trial (RCT), the sample size of 300 participants was selected to assess the feasibility, acceptability, and preliminary effect estimates of TSP, rather than to provide sufficient power for definitive efficacy testing.

Randomisation and masking

Eligible participants were randomly assigned in a 1:1 ratio by a biostatistician using specialized statistical software and randomised blocks of varying sizes to ensure balance and unpredictability between intervention arms. Participants were allocated anonymously using unique study codes. Although participants were aware of their group allocation, outcome assessors and data analysts remained blinded to treatment assignments throughout the trial.

Study interventions

The Tele-Support Psychotherapy (TSP) call center was developed byRocket Health as a digital health solution, enabling psychotherapy to be delivered via mobile phones. Clients accessed TSP through a toll-free line integrated with an Interactive Voice Response (IVR) system. First-time users selected counsellors based on their gender and language preferences, while returning clients were automatically reconnected to their previous counsellor to maintain continuity of care. The IVR system redesign incorporated a database that tracked client-counsellor interactions, streamlined follow-up sessions, and fostered therapeutic relationships. Additionally, the platform included a secure Calls Review System that allowed supervisors to monitor and evaluate counselling sessions remotely using a Virtual Private Network (VPN). These features enhanced service efficiency, ensured confidentiality, evenly distributed counsellor workloads, and positioned the TSP system for scalable, client-centered delivery of mental health care.

The Tele-Support Psychotherapy (TSP) intervention was delivered by trained lay counsellors via mobile phones (12). In the first session, the client and therapist got to know each other, set ground rules, and the therapist clarified expectations and explained the goals of each therapy session, as well as how therapy worked, using culturally relevant metaphors. The second session focused on educating clients about emotions and equipping them with techniques for emotional regulation. In sessions three and four, participants were encouraged to share personal painful experiences and receive emotional support within a safe therapeutic environment. In sessions five and six, participants learned to practice culturally appropriate positive coping skills and unlearn negative coping skills. Finally, in sessions seven and eight, participants learn income generating skills. The sessions utilized storytelling techniques to facilitate expression and healing.

Participants in both intervention and control groups had access to SMHS provided at Makerere University, Naguru, and Mulago hospitals. These are the leading hospitals that offer mental health services in close proximity (within 10km radius) to the study participant locations. Standard services included informal counselling and medication management for mild-to-moderate mental health conditions, delivered by psychiatric clinical officers, nurses, and counsellors. Individuals requiring specialized mental health services beyond the clinic’s capabilities were referred to Butabika National Referral Mental Hospital.

Study Measures

Study participants completed interviewer-administered standardized questionnaires in person or via mobile phone at baseline (T0), 6 months (T1), and 12 months (T2). The collected data included sociodemographic variables

such as age, gender, number of children, education level, marital status, and employment status. Employment status was classified into two categories: "unemployed" and "employed." Relationship status was grouped as "never married," "married/living with a partner," or "divorced/separated." Educational status was categorized into "secondary education," "certificate," and "diploma/degree."

The primary outcome was major depressive disorder. Secondary outcomes included stigma, and participation in income-generating activities, assessed categorically. No changes were made to the planned outcomes after trial commencement.

Major depressive disorder was assessed using the depression module of the **Mini International Neuropsychiatric Interview (MINI)** (16). The depression module comprised two initial screening questions evaluating whether participants experienced either persistent sadness or diminished interest in everyday activities within the preceding four weeks. Participants responding affirmatively were then asked an additional seven questions related to depressive symptoms, as well as a final question assessing functional impairment. Participants were considered to have a diagnosis of major depressive disorder if they reported experiencing at least five of these depressive symptoms alongside functional impairment over the past four-week period.

Stigma was measured using the method developed by Nyblade and MacQuarrie, which assesses the perceived, experienced, and internalized dimensions of stigma (17). The tool was grounded in a systematic literature review designed to address existing gaps in stigma-reduction strategies, particularly within healthcare settings. Scores were analyzed as a continuous variable, ranging from 0 (indicating no stigma) to 40, with higher scores reflecting greater stigma.

Participation in income-generating activities was assessed by asking participants whether they engaged in any income-generating activity or not. The response was analyzed as a categorical variable (yes, no).

Statistical Analysis Plan

Data were analyzed using STATA version 18. First, we conducted bivariate analyses using χ^2 tests and t-tests to compare baseline variables between TSP-SMHS and SMHS participants. We also conducted bivariate analyses to compare these variables between those who completed all follow-up assessments (completers) and those who had not (non-completers) at 12 months.

We used generalized structural equation modelling (GSEM) to evaluate the direct, indirect, and total effects of Tele-Support Psychotherapy (TSP) on major depression at 12 months (T3), mediated through stigma and income generation at 6 months (T2). This modelling approach allowed for the estimation of sequential mediation pathways, accounting for how changes in stigma influenced income generation, which in turn affected depression. To adjust for unobserved heterogeneity at the individual level, we included random effects (latent variables M1 and M2) (18). Additionally, we estimated nonlinear combinations (nlcom) to derive indirect effects, along with their corresponding standard errors (19).

The GSEM model consisted of three primary outcomes: stigma (T2), income generation (T2), and major depression (T3) (Fig. 2). Stigma was modelled as a function of treatment arm (TSP vs. SMHS), time, and their interaction, with an individual-level random effect (M1) to account for unobserved heterogeneity. Income generation was modelled as a function of stigma, treatment arm, time, and their interaction, with a separate individual-level random effect (M2) to capture variation in income generation across participants. Major

depression at 12 months was modelled as a function of treatment arm, time, stigma, income generation, and their interactions, with both M1 and M2 included to control for correlated unobserved factors affecting depression. For binary outcomes, the Stata command *gsem* was used with a binomial family distribution and a logit link to model the log-odds of the dependent variable.

To improve model convergence and account for non-normal distributions of random effects, we applied maximum likelihood estimation with adaptive Gauss-Hermite quadrature (MVAGHERMITE). Robust standard errors were used to correct for heteroskedasticity. Random effects were incorporated into the model to account for individual heterogeneity, with M1 capturing unobserved differences in stigma and M2 capturing variations in income generation and depression. The covariance between M1 and M2 was estimated to assess whether unobserved individual factors jointly influenced stigma and income generation. The latent variables were constrained to a variance of 1 for model identification. To handle missing data, we employed multiple imputation (5 imputations) under the multivariate normal (MVN) assumption (20). This allowed for the simultaneous imputation of all clusters while preserving within-cluster correlations.

Sensitivity Analysis: E-value Calculation

To assess the robustness of our statistically significant effects to potential unmeasured confounding, we computed E-values following the approach proposed by VanderWeele and Ding (2017)(21). The E-value quantifies the minimum strength of association (on the risk ratio scale) that an unmeasured confounder would need to have with both the treatment (Tele-Support Psychotherapy, TSP) and the outcome (major depression at 12 months) to fully explain away the observed effect, beyond measured covariates.

Given that our outcome model produced standardized regression coefficients, we approximated the E-values by first exponentiating the coefficients to estimate a risk ratio (RR). If the resulting RR was < 1, we used its reciprocal (1/RR) to interpret the association in the risk-increasing direction. The E-value was then calculated as:

$$\text{E-value} = RR + \sqrt{(RR \times (RR - 1))}$$

This method provides a conservative estimate of how strongly an unmeasured confounder would need to be associated with both the exposure and outcome to attenuate the effect to null.

Determining cost-effectiveness

We conducted a cost-effectiveness analysis by comparing standard of care SMHS with TSPH from the perspective of mental healthcare providers (22, 23). The time horizon for the cost-effectiveness analysis was 12 months, aligning with the trial's follow-up period. Both direct and indirect costs were identified and estimated using ingredient costing approach (22). Direct costs were financial costs associated with the TSP system set-up, implementation and maintenance. Indirect costs were associated with the value time costs of lay counsellors and any other staff involved in the implementation of the TSP program. Costs were estimated retrospectively based on the programme financial and administrative records and supplemented with other sources such as government documents and guidelines such as salary structure for public service (24). Some costs were based on procurement contracts at the stage of contracting, service delivery contracts, prevailing market rates, reimbursement contracts, etc. The main costs were related to: a) set-up costs such as hiring engineer and system developer, procurement and set-up of equipment and workstation infrastructure, network connectively and establishment and operationalization of the call centre, training and capacity building and installation of backup

systems; b) system maintenance and functionality – including internet, system maintenance, software and security upgrades, too-free operations, etc., and c) Implementation costs including voice calls and aggregation costs, SMS reminder costs, monthly call payments, and facilitation support for community advisory boards. Costs of time for Lay counsellors used for implementation of the program including attending to Tele-support session was estimated and valued based on their estimated earnings as if they had been formally working as per their skills. While Lay Counsellors are not professionally trained counsellors, and had different training qualifications, on average, their qualifications were equated to medical social workers or counsellors as per the government public service system under U4-Salary Scale equivalent to UGX.723,868 or US$201 per month, translating into US$1.3 per hour worked. While the training involved 40 Lay Counsellors spending forty (40) hours of training time (five days), only 25 Lay Counsellors deployed for implementation TSP + SMHS intervention. Each Lay Counsellor conducted a total of 30 counselling sessions during the intervention implementation with each session lasting one hour on average. No participant was hospitalized during the program implementation. The total value of lay counsellors' time during training (40 Lay Counsellors x 40 hours x $1.3 per hour) was $2,080, while the value of lay counsellors' time spent during implementation (25 lay counsellors x 30 hours each x $1.3 per hour) was $942. All costs were standardised and reported in United States Dollars (US$) at an exchange rate of 1$=3600 Uganda Shillings. The total costs of implementing the TSP and the SMHS only were established. The study adopted mean depression score as the primary effectiveness measure. This was an intermediate outcome assessed at baseline and 12-months to evaluate the effect of the program. This intermediate outcome was later mapped onto a generic measure – the Disability-Adjusted Life Years (DALYs) – using a World Health Organization DALY estimator – an Excel-based model (25) and then later discounted at 3% rate. A DALY is a combined measure of years of life lost (YLL) due to premature mortality associated with the health condition (depression) and years of life lost due to morbidity or disability (YLD). The YLL was zero as no mortality associated with depression or mental health among the study participants was reported during the implementation of the program. Only YLD was estimated after application of disability weights for the different forms of depression exhibited in the study population (mild = 0.145, moderate = 0.396) extracted from the Global Burden of Disease estimates (26). The different between the DALYs of TSP& SMHS versus SMHS only was derived to generate the Incremental effect (DALYs averted). Relatedly, the incremental costs were also estimated from the difference in total costs of the two modalities. The incremental costs were divided by the incremental effects to generate an incremental cost-effectiveness ratio (ICER) which was then compared to the WHO threshold measure of GDP per capita for cost-effective interventions (27). Given that the costs were collected from programme information and are generally specific to the structure and design of the programme, we assumed very limited uncertainty around the them. This limited uncertainty was analysed across the key parameters that have a significant influence on the ICER – mainly the costs and the outcome parameters – by varying them by 25% under a univariate sensitivity analysis.

Results

Between May 1st and July 30th, 2023, we assessed 317 individuals from the Naguru, Kamwokya, and Makerere University communities. Of these, 300 participants were recruited and randomized to receive either Tele-support psychotherapy combined with Standard Mental Health Services (TSP + SMHS, n = 154) or Standard Mental Health Services alone (SMHS, n = 146). The trial profile, illustrated in Fig. 1, captures the flow of participants through the study phases. Baseline sociodemographic and psychosocial characteristics are detailed in Table 1.

Study Attrition: Six months after randomization, 229 (76.3%) participants were successfully traced and re-evaluated using interviewer-administered semi-structured questionnaires, while 71 (23.6%) were lost to follow-up.

By 12 months, follow-up efforts successfully reduced the number lost to follow-up to 52 (17.33%), enabling 248 (82.6%) participants to be re-evaluated. Reasons for loss to follow-up included relocation, loss of contact, or refusal to participate. Attrition from the study was comparable in both treatment groups. No serious adverse events were reported. Participants lost to follow-up at the 12-month follow-up assessment did not differ significantly in baseline variables (Table 2).

Primary outcomes of this trial have been published elsewhere (12). In brief, six months after randomization, 71 participants (46.1%) in the TSP + SMHS group utilized the TSP platform to receive tele-support psychotherapy sessions from lay counsellors via mobile phones, while only 8 participants (8.12%) in the SMHS-only group attended health facilities for in-person counselling sessions. By 12 months, the number of TSP + SMHS participants utilising the TSP platform had increased to 95 (61.6%), while 15 participants (12.5%) in the SMHS-only group had attended in-person counselling sessions. Although some individuals did not receive the offered treatments, they were included in follow-up assessments to ensure an intention-to-treat analysis of the intervention's impact. Detailed comparisons of TSP engagers and non-engagers have been published elsewhere.

Exploring Underlying Mechanisms:

A generalized structural equation model (GSEM) was employed to investigate the relationships between stigma, income generation, and major depression, while controlling for the effects of time and treatment arm (TSP vs. SMHS) (Table 3).

Stigma

The intervention arm (TSP) was significantly associated with lower stigma compared to the SMHS arm (β = -0.9996, SE = 0.4187, z = -2.39, p = 0.017, 95% CI [-1.820, -0.179]). Time had a strong negative effect on stigma (β = -2.179, SE = 0.0794, z = -27.45, p < 0.001, 95% CI [-2.334, -2.023]), indicating that stigma decreased significantly across both groups over time. Additionally, a significant interaction was found between treatment arm and time (β = 0.2382, SE = 0.1108, z = 2.15, p = 0.032, 95% CI [0.021, 0.455]), indicating that the rate of stigma reduction was greater in the TSP group than the control group.

Income Generation: Participants in the TSP arm had significantly higher income generation than those in the SMHS arm (β = 1.3378, SE = 0.6253, z = 2.14, p = 0.032, 95% CI [0.112, 2.563]). Income generation increased significantly over time (β = 1.6546, SE = 0.1015, z = 16.3, p < 0.001, 95% CI [1.455, 1.853]). The interaction between treatment arm and time was also significant (β = 0.3087, SE = 0.1399, z = 2.21, p = 0.027, 95% CI [0.034, 0.582]), indicating that the TSP group exhibited a steeper increase in income generation over time. Additionally, stigma was negatively associated with income generation (β = -0.0461, SE = 0.0162, z = -2.85, p = 0.004, 95% CI: -0.078 to -0.014), indicating that higher levels of stigma were associated with lower income.

Major Depression

Stigma was positively associated with major depression (β = 0.0694, SE = 0.0116, z = 6.01, p < 0.001, 95% CI [0.046, 0.092]), indicating that individuals with higher stigma scores reported greater depressive symptoms. Participants in the TSP arm had significantly higher major depression scores than those in the SMHS arm (β = 0.9564, SE = 0.2503, z = 3.82, p < 0.001, 95% CI [0.465, 1.447]). However, major depression decreased significantly over time (β = -1.0891, SE = 0.0683, z = -15.95, p < 0.001, 95% CI [-1.223, -0.955]), with a significant interaction between treatment arm and time (β = -1.3415, SE = 0.0862, z = -15.56, p < 0.001, 95% CI [-1.511, -1.173]). This

finding suggests that the reduction in depression over time was greater for participants in the TSP arm. Additionally, income generation was negatively associated with major depression (β = -0.2821, SE = 0.0215, z = -13.11, p < 0.001, 95% CI [-0.324, -0.240]), indicating that individuals with higher income reported lower depressive symptoms.

Indirect and Total Effects of Tele-Support Psychotherapy on Major Depression at 12 Months Through Stigma and Income Generation at 6 Months

Indirect Effects of TSP on Major Depression via Stigma

We used the *nlcom* command to compute the indirect and total effect coefficients. The indirect effect of TSP on depression via stigma at 6 months was not statistically significant (β = -0.036, SE = 0.025, p = 0.153, 95% CI: -0.086 to 0.014), suggesting that reductions in stigma alone did not significantly mediate the relationship between TSP and depression at 12 months. However, the total effect of TSP on depression was significant (β = -3.104, SE = 0.220, p < 0.001, 95% CI [-3.536, -2.672]), indicating that TSP had a strong overall effect on reducing depressive symptoms.

Indirect Effects of TSP on Major Depression via Income Generation

TSP had a significant indirect effect on depression through income generation (β = -0.552, SE = 0.166, p = 0.001, 95% CI: -0.877 to -0.226). This finding suggests that improvements in income at 6 months contributed to lower depression scores at 12 months. The total effect of TSP on depression, including both direct and indirect pathways, remained highly significant (β = -3.619, SE = 0.265, p < 0.001, 95% CI [-4.140, -3.098]).

Sequential Indirect Effect of TSP on Major Depression via Stigma → Income Generation

TSP also had a significant total indirect effect on depression through the sequential pathway of stigma reduction leading to increased income generation, which subsequently contributed to lower depression scores (β = -0.667, SE = 0.172, p < 0.001, 95% CI [-1.005, -0.330]). The total effect of TSP, combining direct and indirect pathways, remained significant (β = -3.736, SE = 0.274, p < 0.001, 95% CI [-4.273, -3.198]), demonstrating a robust impact of the intervention on depression at 12 months(Table 4).

Sensitivity Analysis Results:

Table 5
E-value Interpretation

Pathway	Coefficient	P-value	E-value
TSP → Income → Depression (Indirect Effect)	-0.552	0.001	2.87
TSP → Stigma → Income → Depression (Total Indirect Effect)	-0.667	< 0.001	3.31
Total Effect (Direct + Indirect)	-3.736	< 0.001	83.36

These results suggest that: An unmeasured confounder would need to be associated with both TSP and depression by a risk ratio of at least 2.87 to explain away the indirect effect through income generation, and by at least 3.31 to explain away the indirect effect through sequential stigma and income changes. The total effect of TSP on depression, with an E-value of 83.36, is highly robust to unmeasured confounding. It is unlikely that any plausible confounder could fully account for this observed effect.

Costs and cost effectiveness

The total costs of implementing the tele-support psychotherapy were estimated at $ 75,936. The intervention costs were mainly incurred on setting up the tele-support platform ($20,622 or 27.2%), $30,243 on trainings (39.8%), $8,716 on system functionality and maintenance (11.5%), $ 13,333 on system implementation and operationalization (17.6%), and $3,022 as compensation for time spent by volunteer lay counsellors during the counselling sessions including time spent during training period. We did not include the value of time for the counsellors within the SMHS because providing counselling support is part of integrated or routine service delivery for which the providers are paid a salary. Counsellors and psychiatrists who were involved in training the voluntary Counsellors were provided allowance and transport facilitation which was captured under the training costs. Thus, no cost was expended on the SMHS only. Details of the intervention costs are presented in **Table A** in the annexture.

For CEA, the mean depression scores were measured at baseline and compared with the endline scores (at 12-months) for the two modalities. At baseline, the mean depression scores were 12.44 for TSP&SMHS participants and 12.33 for SMHS only participants. The mean depression scores at endline were 4.03 for TSP&SMHS participants and 9.17 for SMHS only participants. We assumed that depression could have started 2 years before it was actually diagnosed and this assumption was based on the structure of mental health services in Uganda and the fact that it takes time for individuals to present in health facilities when faced with mental health challenges. Only mild and moderate depression characterised the participants. Using the WHO DALY Estimator with weights applied to the mean depression scores shows 108.4 YLDs for SMHS only compared to 100.4 YLDs for TSP & SMHS at baseline. This is compared with 64.2 YLDs for SMHS only compared to 22.1 YLDs for TSP&SMHS at endline (12-months). The estimated difference between baseline and endline were 44.2 YLDs and 78.3 YLDs for SMHS only and TSP&SMHS respectively, translating into 42.9 YLDs and 76.02 YLDs respectively after discounting at 3% **(Table B**). The difference in DALYs averted between the two modalities was 33.12 DALYs averted, and an estimated ICER of US$2,293 per DALY averted from the provider perspective. Based on the WHO definition of cost-effective interventions comparing with GDP per capita (REF), and using the Uganda GDP per capita of US$1,002 26)the ICER estimate is less than three times the GDP per capita and therefore cost-effective. This implies that compared to the SMHS only, the TSP + SMHS was cost effective with an ICER per DALY averted of US$2,293. A ‘quick and dirty’ univariate sensitivity analysis was performed by varying the two key parameters – costs and outcomes – by 30% to analyse the impact on the ICER and the conclusion made so far. Using a 30% increasement in total costs generated an ICER of US$2980.58 per DALY averted which was still cost-effective based on the GDP per capita threshold. However, increases in cost beyond 32% resulted in an ICER that was cost-ineffective. Relatedly, a 30% increase in incremental DALYs averted (outcomes) resulted into an ICER of US$1763.66 per DALY averted, while a corresponding reduction in outcomes by 30% resulted into an ICER of US$3,275 which is cost-ineffective. The univariate sensitivity analysis thus indicates that bigger increases in costs beyond 32% and reductions in outcomes beyond 25% may result in a cost-ineffective ICER, while reductions in total costs and increases in outcomes will make the ICER even more cost-effective. In summary, the mobile phone-based Tele-Support Psychotherapy (TSP), implemented alongside the standard mental healthcare service (SMHS) packages proved to be a cost-effective approach than using the SMHS alone.

Discussion

This study builds upon previous research demonstrating the efficacy of Tele-Support Psychotherapy (TSP) in treating mild to moderate depression among youth aged 15 to 30 [12]. The initial study established TSP as a highly

effective intervention for this demographic. The current secondary analysis examines the mechanisms underlying TSP's effectiveness and assesses its cost-effectiveness. These are the major findings.

First, the analysis identified that a sequential reduction in stigma and increased participation in income-generating activities was a significant mediating pathway in the relationship between TSP and depression outcomes. Participants receiving TSP exhibited a notable decrease in stigma compared to those receiving Standard Mental Health Services (SMHS) alone. This stigma reduction was associated with enhanced participation in income-generating activities, which, in turn, correlated with a decrease in depressive symptoms. These findings suggest that TSP not only directly alleviates depression but also indirectly benefits individuals by reducing stigma and improving economic productivity.

Second, the economic evaluation revealed that integrating TSP with SMHS showed an ICER of US$2,293 per DALY averted for TSP&SMHS compared to SMHS only using the provider’s perspective, which is cost-effective because it is less than three times the Ugandan GDP of US$1,002 for 2023. Univariate sensitivity analysis showed that only increasing programme cost estimates by less than 30% and increasing outcomes by any percentage would not alter the decision on cost-effectiveness, in any case, would make the intervention more cost-effective. However, any cost increases by more than 30% and reductions in outcomes (DALYs averted) by more than 25% would make the intervention cost-ineffective. In otherwards, costs, and outcomes are key parameters in whether the programme becomes cost-effective or not. While TSP &SMHS programme was cost-effective, it could have been more cost-effective if the implementation time was longer than the pilot period of twelve months, and this is because a lot of costs were expended on the programme set-up phase which become fixed costs (sunk costs). These are initial investments whose benefits will be realised over a longer time in terms of economies of scale – reduced average costs of delivering mental health services, and in this context, the anticipated rollout of the programme is anticipated to generate even more favourable ICER estimates. The TSP&SMHS programme largely involved the use of voluntary lay counsellors which could have contributed to low-cost estimates since lay counsellors were provided allowance which are significantly less than the value of their labour. This is a classic example of how task-sharing arrangements can actually generate greater health benefits at lesser costs (28). Beyond this, the CEA results demonstrate the role integrated service delivery in resource constrained settings. Policy makers should consider this evidence to advocate for broader implementation of such integrated models of mental health interventions, as they illustrate increased return to investment while addressing critical mental health needs in the population. The majority of the incremental costs were attributed to training and system setup, highlighting the importance of initial investments in ensuring the intervention's success.Research on the mediators of telepsychotherapy's effects on depression is limited. However, studies on internet- and mobile-based interventions (IMIs) for mental health have demonstrated their potential cost-effectiveness. A systematic review by Kählke et al. (2022) found that guided IMIs are likely to be cost-effective for treating depression and anxiety, with most studies reporting ICERs below the accepted willingness-to-pay thresholds (29). In other health domains, mobile health interventions have shown promising results. For instance, the ImTeCHO program in Gujarat, India, aimed at reducing infant mortality through mobile health strategies, was found to be cost-effective, demonstrating the broader applicability of mobile interventions in resource-limited settings (30).

While direct studies on mediators of telepsychotherapy are scarce, the observed pathways in this study align with broader findings that reducing stigma and enhancing economic opportunities can significantly improve mental health outcomes (31). These insights underscore the multifaceted benefits of interventions like TSP, which not only address psychological symptoms but also contribute to social and economic well-being.

The findings of this study have important implications for mental health policy, clinical practice, and future research. The demonstrated effectiveness and cost-effectiveness of Tele-Support Psychotherapy (TSP) suggest that it could be integrated into Uganda's national mental health strategy, particularly for youth populations who face barriers to accessing in-person care (32). The success of lay counsellors in delivering psychotherapy via mobile phones also supports task-shifting as a viable strategy to address mental health workforce shortages, emphasizing the need for workforce training and capacity building (33). This is further supported by Lakshminarayanan et al. (2020), who demonstrated the feasibility and effectiveness of digitally training lay counselors to deliver perinatal mental health interventions, highlighting how digital platforms can successfully enhance counselor competencies and extend mental health services to underserved populations (34).

Additionally, the significant role of stigma reduction coupled with improved participation in income generation in improving mental health outcomes highlights the necessity of addressing stigma and livelihood skills when delivering psychotherapy in the African context. Stigmatized individuals often face discrimination in employment, education, and social relationships, which can exacerbate feelings of isolation and worsen mental health conditions. By directly targeting stigma reduction, interventions like TSP not only improve mental health outcomes but also create an enabling environment where individuals feel more accepted and supported in their communities (35).

Economic empowerment through participation in income-generating activities provides financial stability, reduces stress, and enhances self-efficacy—key factors in sustaining mental health improvements (36). Given that economic hardship is both a contributor to and a consequence of poor mental health, integrating livelihood skills into psychotherapy can create a reinforcing cycle where improved mental well-being enhances economic opportunities, which in turn further supports mental health recovery (37). This holistic approach aligns with the broader determinants of health and is particularly relevant in low-resource settings, where economic resilience and social acceptance play a crucial role in long-term mental health sustainability (38). .

Clinically, the ability of TSP to expand access to care is particularly relevant in low-resource settings, where distance, financial constraints, and stigma often limit service utilization. In low-resource settings, barriers such as geographic distance, financial constraints, and stigma significantly limit access to traditional mental health services (39). Many individuals, particularly in rural or underserved areas, face long travel distances to reach healthcare facilities, which can be both costly and time-consuming (40). Financial constraints further exacerbate this issue, as direct costs (e.g., consultation fees, transportation) and indirect costs (e.g., lost wages due to time spent seeking care) make in-person treatment unaffordable for many (41). Additionally, stigma surrounding mental illness discourages individuals from seeking help at health facilities due to fear of discrimination or social repercussions (33). TSP overcomes these barriers by delivering psychotherapy remotely, allowing individuals to access mental health support from their own homes using mobile phones. This not only reduces logistical and financial burdens but also offers a level of privacy that can mitigate stigma-related concerns. As a result, TSP enhances mental healthcare accessibility, particularly for populations who might otherwise forgo treatment due to structural or societal obstacles.

Research implications from this study emphasize the need to further explore the mechanisms underlying digital mental health interventions, particularly in understanding additional mediators such as social support, emotion-focused and problem-focused coping. Comparative effectiveness studies should also assess how TSP performs relative to other digital interventions, including mobile applications for self-guided care. Cost-effectiveness analyses further reinforce that while TSP is a financially viable intervention, its sustainability will require long-term

funding strategies, potentially through public-private partnerships or integration into national health insurance schemes.

As mobile-based mental health interventions gain global traction, the findings from this study contribute to broader discussions in digital health, supporting the use of telemedicine approaches to address health disparities (42). By addressing both psychological and socioeconomic factors, TSP presents a holistic, scalable model for mental health care in low- and middle-income settings, with broader implications for global mental health policy and service delivery.

Study Limitations and Strengths

This study had some limitations. First, self-reported measures were used to assess mental health outcomes, stigma, and income generation, which may be subject to recall and social desirability biases. Second, while the study successfully followed up with 82.6% of participants at 12 months, some loss to follow-up (17.3%) may have introduced selection bias, particularly if those lost to follow-up had systematically different mental health trajectories. Third, the study was conducted in specific urban and peri-urban Ugandan communities, which may limit the generalizability of findings to rural populations or other cultural settings. Additionally, the study did not analyze heterogeneity in cost-effectiveness across subgroups such as age, gender, or community due to the pilot trial's limited sample size, which may limit the applicability of ICER to specific populations. Lastly, the mediation analyses assumed sequential ignorability (43) ; that is, the absence of unobserved confounders of the (i) exposure-outcome and (ii) exposure-mediator relationships and (iii) the absence of unobserved (baseline or postexposure) confounders of the mediator-outcome relationship. To assess robustness, we conducted sensitivity analyses evaluating potential unmeasured mediator-outcome confounding using E-value analysis. These sensitivity analyses supported the stability and reliability of our mediation findings.

Despite the limitations, the study's strengths lie in its robust design, comprehensive analysis, and real-world applicability. First, the study employed a randomized controlled trial (RCT) design, which is the gold standard for evaluating the effectiveness of interventions, ensuring that the observed effects of TSP were not due to confounding variables. Second, the longitudinal follow-up over 12 months enabled the assessment of both the short-term and sustained impacts of the intervention, providing valuable insights into its long-term effectiveness. Third, the study employed an intention-to-treat analysis, which enhances the validity of the findings by ensuring that results reflect real-world adherence patterns rather than ideal conditions. The exploration of mediators such as stigma reduction and income generation provides a nuanced understanding of some of the mechanisms through which TSP influences mental health outcomes, adding to the limited global evidence on psychotherapy mediators. Another key strength is the study's cost-effectiveness analysis, which provides critical economic data to inform policy decisions regarding the scalability and sustainability of TSP within existing mental health systems. Finally, the study was conducted in a real-world, low-resource setting, enhancing the generalizability of the findings to similar contexts across Africa and other low- and middle-income countries (LMICs).

In conclusion, this study demonstrates that Tele-Support Psychotherapy is an effective and cost-effective intervention for treating mild to moderate depression among youth in Uganda. By reducing stigma and enhancing income generation, TSP significantly improved mental health outcomes. These findings highlight the potential of telepsychotherapy to enhance access to care in low-resource settings and emphasize the need for its integration into national mental health strategies for scalable and sustainable impact.

Declarations

Funding: **USAID (DIV)**

Trial Registration: PACTR202201684613316.

Protocol version: 03/08/2024

References

1. Culbreth RE, Nielsen KE, Mobley K, Palmier J, Bukuluki P, Swahn MH (2024) Life Satisfaction Factors, Stress, and Depressive Symptoms among Young Women Living in Urban Kampala: Findings from the TOPOWA Project Pilot Studies. IJERPH 21(2):184
2. Logie CH, Berry I, Okumu M, Loutet M, McNamee C, Hakiza R et al (2022) The prevalence and correlates of depression before and after the COVID-19 pandemic declaration among urban refugee adolescents and youth in informal settlements in Kampala, Uganda: A longitudinal cohort study. Ann Epidemiol 66:37–43
3. Nsereko JR, Garman EC, Roomaney R (2022) Depressive symptoms and socio-demographic correlates among adolescents in Kampala: a cross-sectional study. South Afr J Psychol 52(3):313–324
4. Kamacooko O, Bagiire D, Kasujja FX, Mirembe M, Seeley J, King R (2022) Prevalence of probable depression and factors associated with mean Hopkins Symptom Checklist (HSCL) depression score among young women at high risk aged 15–24 years in Kampala, Uganda. Francis JM, editor. PLoS ONE. ;17(6):e0270544
5. Cavazos-Rehg P, Xu C, Kasson E, Byansi W, Bahar OS, Ssewamala FM (2020) Social and Economic Equity and Family Cohesion as Potential Protective Factors from Depression Among Adolescents Living with HIV in Uganda. AIDS Behav 24(9):2546–2554
6. Reutter LI, Stewart MJ, Veenstra G, Love R, Raphael D, Makwarimba E (2009) Who Do They Think We Are, Anyway? Perceptions of and Responses to Poverty Stigma. Qual Health Res 19(3):297–311
7. Marbin D, Gutwinski S, Schreiter S, Heinz A (2022) Perspectives in poverty and mental health. Front Public Health 10:975482
8. Mascayano F, Armijo JE, Yang LH Addressing Stigma Relating to Mental Illness in Low- and Middle-Income Countries. Front Psychiatry [Internet]. 2015 Mar 11 [cited 2025 Jun 30];6. Available from: http://www.frontiersin.org/Affective_Disorders_and_Psychosomatic_Research/10.3389/fpsyt.2015.00038/full
9. Amone-P'Olak K, Kakinda AI, Kibedi H, Omech B (2023) Barriers to treatment and care for depression among the youth in Uganda: The role of mental health literacy. Front Public Health 11:1054918
10. Nakimuli-Mpungu E, Musisi S, Wamala K, Okello J, Ndyanabangi S, Birungi J et al (2020) Effectiveness and cost-effectiveness of group support psychotherapy delivered by trained lay health workers for depression treatment among people with HIV in Uganda: a cluster-randomised trial. Lancet Glob Health 8(3):e387–e398
11. Nakimuli-Mpungu E, Smith CM, Wamala K, Okello J, Birungi J, Etukoit M et al (2022) Long-Term Effect of Group Support Psychotherapy on Depression and HIV Treatment Outcomes: Secondary Analysis of a Cluster Randomized Trial in Uganda. Psychosom Med 84(8):914–923
12. Developing and Testing Tele- Support Psychotherapy through Mobile Phones for Youth (15–30 Years) with Depression in Uganda | IntechOpen [Internet]. [cited 2025 Jun 18]. Available from: https://www.intechopen.com/chapters/1207395

13. Nakimuli-Mpungu E, Kwesiga JM, Bwanika JM, Musinguzi D, Nakanyike C, Iya J et al Developing and testing tele-support psychotherapy using mobile phones for depression among youth in Kampala district, Uganda: study protocol for a pilot randomized controlled trial. Front Digit Health [Internet]. 2025 Feb 18 [cited 2025 Jun 18];7. Available from: https://www.frontiersin.org/journals/digital-health/articles/10.3389/fdgth.2025.1515193/full
14. Husereau D, Drummond M, Augustovski F, de Bekker-Grob E, Briggs AH, Carswell C et al (2022) Consolidated Health Economic Evaluation Reporting Standards (CHEERS) 2022 Explanation and Elaboration: A Report of the ISPOR CHEERS II Good Practices Task Force. Value Health 25(1):10–31
15. Hopewell S, Chan AW, Collins GS, Hróbjartsson A, Moher D, Schulz KF et al (2025) CONSORT 2025 statement: updated guideline for reporting randomised trials. BMJ. ;e081123
16. Sheehan DV, Lecrubier Y, Sheehan KH, Amorim P, Janavs J, Weiller E et al (1998) The Mini-International Neuropsychiatric Interview (M.I.N.I.): the development and validation of a structured diagnostic psychiatric interview for DSM-IV and ICD-10. J Clin Psychiatry. ;59 Suppl 20:22–33;quiz 34–57
17. Nyblade Laura K Can we measure HIV/AIDS-related stigma and discrimination? Current knowledge about quantifying stigma in developing countries [Internet]. International Center for Research on Women (ICRW), POLICY Project; 2006 Jan [cited 2025 Jun 18]. Available from: https://www.icrw.org/wp-content/uploads/2016/10/Can-We-Measure-HIV-Stigma-and-Discrimination.pdf
18. Yildirim E, Karasoy D (2020) gsem: A Stata command for parametric joint modelling of longitudinal and accelerated failure time models. Comput Methods Programs Biomed 196:105612
19. Pearl J (2022) Direct and Indirect Effects. In: Geffner H, Dechter R, Halpern JY, editors. Probabilistic and Causal Inference [Internet]. 1st ed. New York, NY, USA: ACM; [cited 2025 Jun 18]. pp. 373–92. Available from: https://dl.acm.org/doi/10.1145/3501714.3501736
20. Lee KJ, Carlin JB (2010) Multiple Imputation for Missing Data: Fully Conditional Specification Versus Multivariate Normal Imputation. Am J Epidemiol 171(5):624–632
21. VanderWeele TJ, Ding P (2017) Sensitivity Analysis in Observational Research: Introducing the E-Value. Ann Intern Med 167(4):268–274
22. Sanders GD, Neumann PJ, Basu A, Brock DW, Feeny D, Krahn M et al (2016) Recommendations for Conduct, Methodological Practices, and Reporting of Cost-effectiveness Analyses: Second Panel on Cost-Effectiveness in Health and Medicine. JAMA 316(10):1093–1103
23. Walker D (2001) Cost and cost-effectiveness guidelines: which ones to use? Health Policy Plan 16(1):113–121
24. Circular Standing Instruction (CSI) 14 of 2024 – Salary Structure for Financial Year 2024/2025 – Ministry of Public Service [Internet]. [cited 2025 Jun 18]. Available from: https://www.publicservice.go.ug/download/circular-standing-instruction-csi-14-of-2024-salary-structure-for-financial-year-2024-2025/
25. Murray CJL (ed) (1996) The global burden of disease: summary; a comprehensive assessment of mortality and disability from diseases, injuries, and risk factors in 1990 and projected to 2020. World Health Organization [u.a.], Geneve, p 43
26. Institute for Health Metrics and Evaluation (IHME) Global Burden of Disease 2021: Findings from the GBD 2021 Study [Internet]. Seattle, WA: Institute for Health Metrics and Evaluation; 2024 [cited 2025 Jun 18]. Available from: https://www.healthdata.org/research-analysis/gbd

27. Leech AA, Kim DD, Cohen JT, Neumann PJ (2018) Use and Misuse of Cost-Effectiveness Analysis Thresholds in Low- and Middle-Income Countries: Trends in Cost-per-DALY Studies. Value Health 21(7):759–761
28. Buttorff C, Hock RS, Weiss HA, Naik S, Araya R, Kirkwood BR et al (2012) Economic evaluation of a task-shifting intervention for common mental disorders in India. Bull World Health Organ 90(11):813–821
29. Kählke F, Buntrock C, Smit F, Ebert DD (2022) Systematic review of economic evaluations for internet- and mobile-based interventions for mental health problems. NPJ Digit Med 5(1):175
30. Modi D, Saha S, Vaghela P, Dave K, Anand A, Desai S et al (2020) Costing and Cost-Effectiveness of a Mobile Health Intervention (ImTeCHO) in Improving Infant Mortality in Tribal Areas of Gujarat, India: Cluster Randomized Controlled Trial. JMIR Mhealth Uhealth 8(10):e17066
31. Budhwani H, De P (2019) Perceived Stigma in Health Care Settings and the Physical and Mental Health of People of Color in the United States. Health Equity 3(1):73–80
32. Dwanyen L, Luberenga I, Asiimwe R, Galukande P, Blow A, Kasujja R (2024) Voices from the ground: Qualitative perspectives on Ugandan national mental health system strengths, challenges, and recommendations. Kuek JHL, editor. PLOS Ment Health. ;1(6):e0000077
33. Singla DR, Kohrt BA, Murray LK, Anand A, Chorpita BF, Patel V (2017) Psychological Treatments for the World: Lessons from Low- and Middle-Income Countries. Annu Rev Clin Psychol 13:149–181
34. Lakshminarayanan M, Kathuria N, Mehra S (2020) Delivery of perinatal mental health services by training lay counselors using digital platforms. Asian J Psychiatry 54:102277
35. Thornicroft G, Mehta N, Clement S, Evans-Lacko S, Doherty M, Rose D et al (2016) Evidence for effective interventions to reduce mental-health-related stigma and discrimination. Lancet 387(10023):1123–1132
36. Duman Y, Meier J, Marzouk H (2024) Beyond Survival: Transformative Impacts of Integrating Mental Health and Livelihood Support in Conflict Zones. J Peacebuilding Dev 19(2–3):158–176
37. Haushofer J, Fehr E (2014) On the psychology of poverty. Science 344(6186):862–867
38. Hall CE, Wehling H, Stansfield J, South J, Brooks SK, Greenberg N et al (2023) Examining the role of community resilience and social capital on mental health in public health emergency and disaster response: a scoping review. BMC Public Health 23(1):2482
39. Patel V, Chisholm D, Parikh R, Charlson FJ, Degenhardt L, Dua T et al (2016) Addressing the burden of mental, neurological, and substance use disorders: key messages from Disease Control Priorities, 3rd edition. The Lancet. ;387(10028):1672–85
40. Bee PE, Bower P, Lovell K, Gilbody S, Richards D, Gask L et al (2008) Psychotherapy mediated by remote communication technologies: a meta-analytic review. BMC Psychiatry 8(1):60
41. Evans-Lacko S, Thornicroft G, Viewpoint, WHO World Mental Health Surveys International College Student initiative (2019) Implementation issues in low- and middle-income countries. Int J Methods Psychiatr Res 28(2):e1756
42. Fu Z, Burger H, Arjadi R, Bockting CLH (2020) Effectiveness of digital psychological interventions for mental health problems in low-income and middle-income countries: a systematic review and meta-analysis. Lancet Psychiatry 7(10):851–864
43. Ten Have TR, Joffe MM (2012) A review of causal estimation of effects in mediation analyses. Stat Methods Med Res 21(1):77–107

Tables

Tables 1-4 not available with this version.

Figures

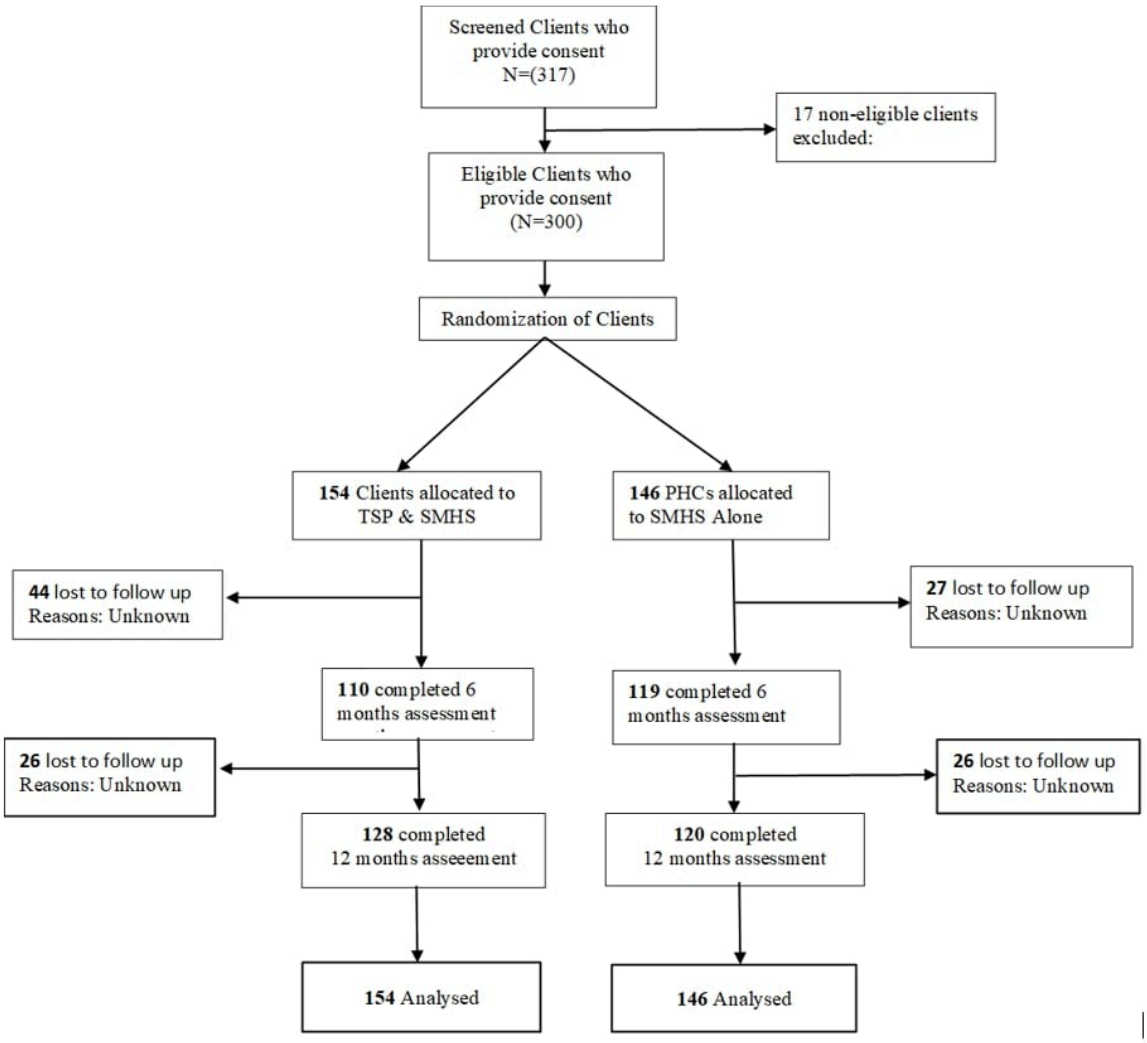

Figure 1: Participant Flow Diagram

Figure 1

TSP Participant Flow Diagram

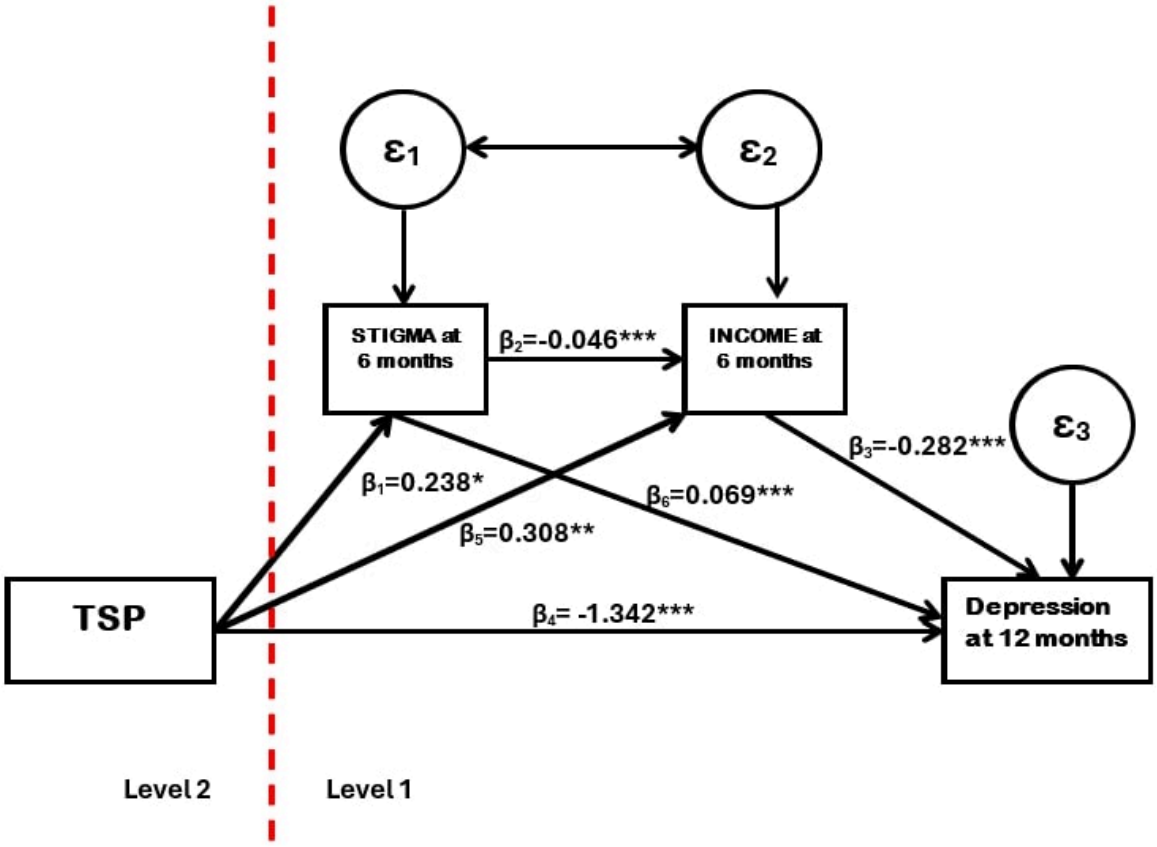

Figure 2: Generalized multilevel structural equation modelling (GSEM) to estimate coefficients for depression on TSP (β_1), income generation on TSP (β_5), income generation on stigma (β_2), as well as co-efficients for depression on stigma (β_6), depression on income generation (β_3) and depression on TSP (β_4). All models included time and treatment (TSP) and their interaction. Arrows denote associations; ε in circles represents error terms for each of the outcome and mediator regressions.

Figure 2

Generalized multilevel structural equation modelling

Supplementary Files

This is a list of supplementary files associated with this preprint. Click to download.

- AnnextureCEATABLES2025.docx