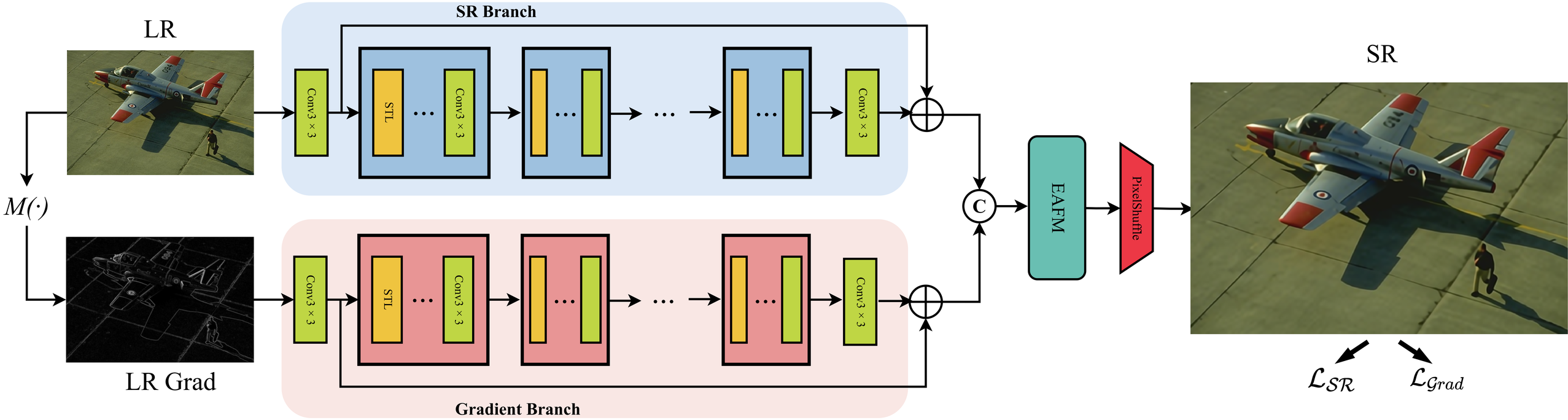

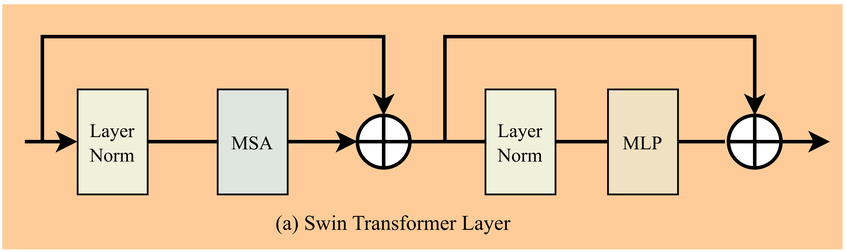

(a) Swin Transformer Layer

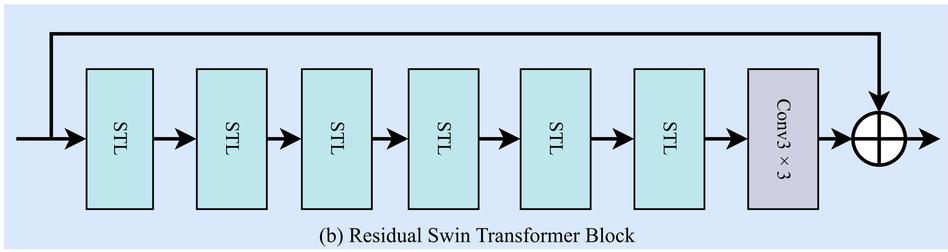

(b) Residual Swin Transformer Block

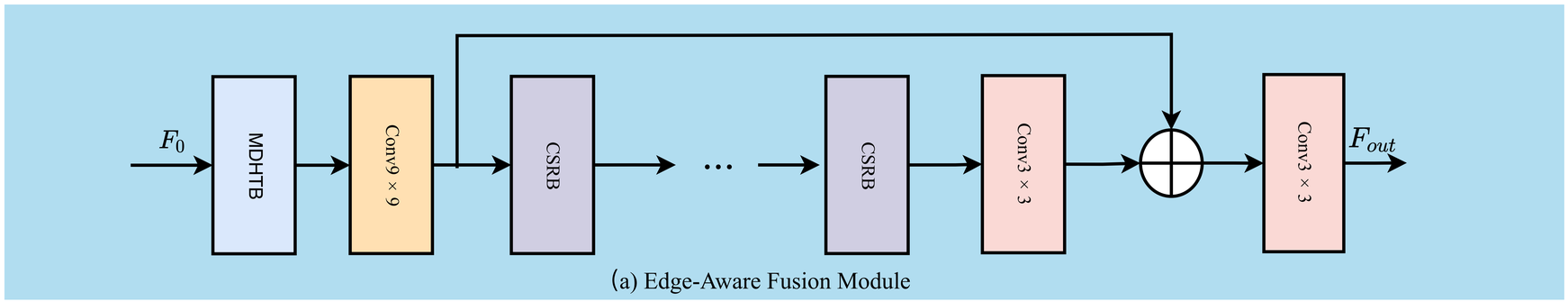

(a) Edge-Aware Fusion Module

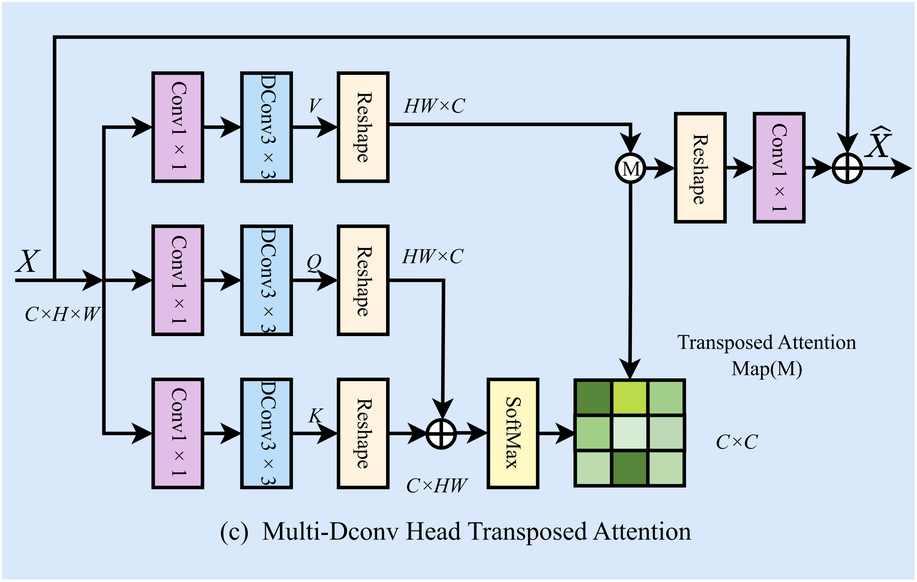

(c) Multi-Dconv Head Transposed Attention

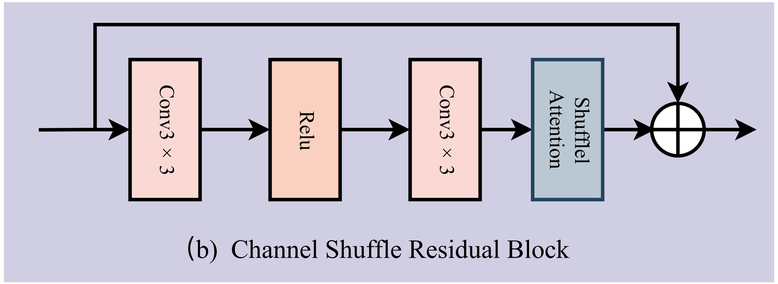

(b) Channel Shuffle Residual Block

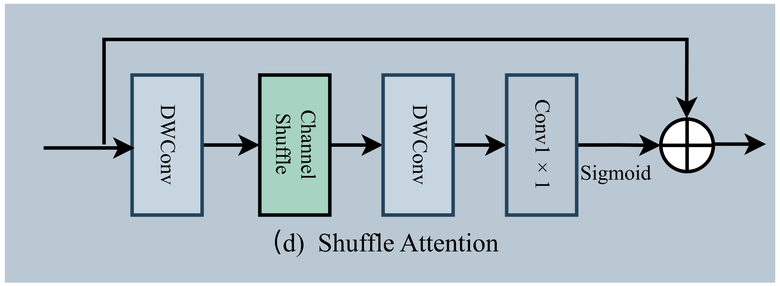

(d) Shuffle Attention