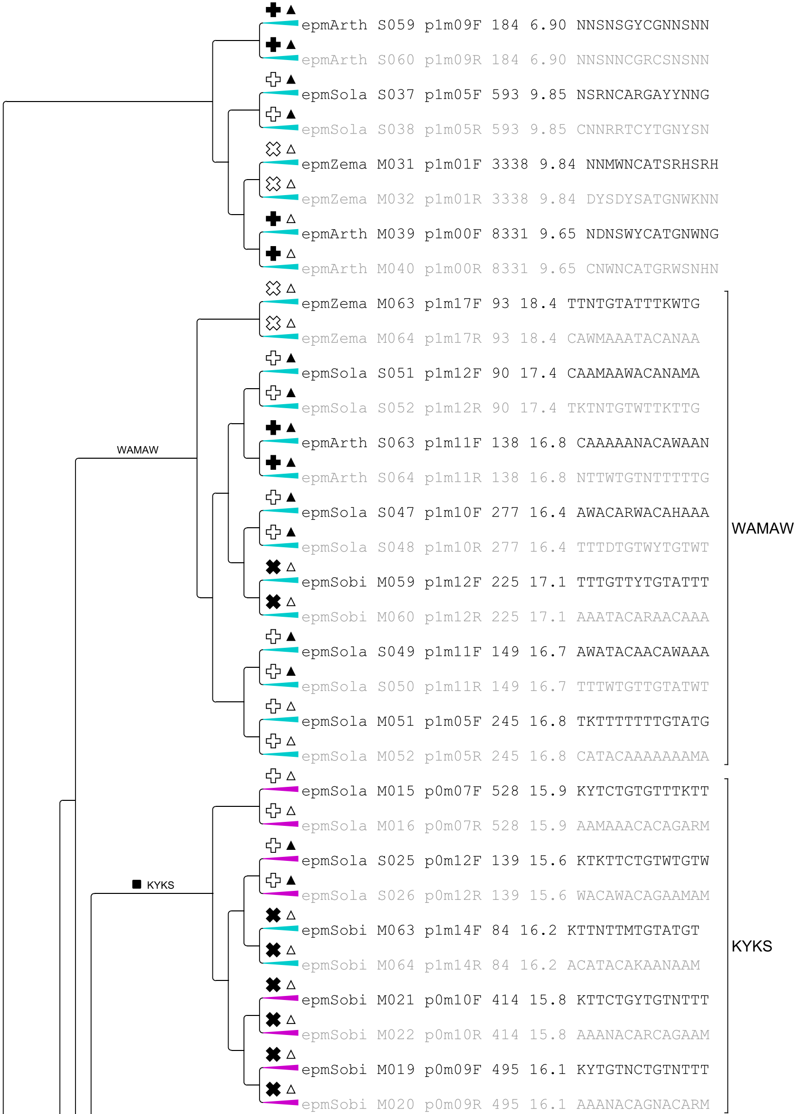
epmArth S059 p1m09F 184 6.90 NNSNSGYCGNNSNN
epmArth S060 p1m09R 184 6.90 NNSNNCGRCSNSNN
epmSola S037 p1m05F 593 9.85 NSRNCARGAYYNNG
epmSola S038 p1m05R 593 9.85 CNNRRTCYTGNYSN
epmZema M031 p1m01F 3338 9.84 NNMWNCATSRHSRH
epmZema M032 p1m01R 3338 9.84 DYSDYSATGNWKNN
epmArth M039 p1m00F 8331 9.65 NDNSWYCATGNWNG
epmArth M040 p1m00R 8331 9.65 CNWNCATGRWSNHN
WAMAW
epmZema M063 p1m17F 93 18.4 TTNTGTATTTKWTG
epmZema M064 p1m17R 93 18.4 CAWMAAATACANAA
epmSola S051 p1m12F 90 17.4 CAAMAAWACANAMA
epmSola S052 p1m12R 90 17.4 TKTNTGTWTTKTTG
epmArth S063 p1m11F 138 16.8 CAAAAANACAWAAN
epmArth S064 p1m11R 138 16.8 NTTWTGTNTTTTTG
epmSola S047 p1m10F 277 16.4 AWACARWACAHAAA
epmSola S048 p1m10R 277 16.4 TTTDTGTWYTGTWT
epmSobi M059 p1m12F 225 17.1 TTTGTTYTGTATTT
epmSobi M060 p1m12R 225 17.1 AAATACARAACAAA
epmSola S049 p1m11F 149 16.7 AWATACAACAWAAA
epmSola S050 p1m11R 149 16.7 TTTWTGTTGTATWT
epmSola M051 p1m05F 245 16.8 TKTTTTTTTGTATG
epmSola M052 p1m05R 245 16.8 CATACAAAAAAAMA
WAMAW
■ KYKS
epmSola M015 p0m07F 528 15.9 KYTCTGTGTTTKTT
epmSola M016 p0m07R 528 15.9 AAMAAACACAGARM
epmSola S025 p0m12F 139 15.6 KTKTTCTGTWTGTW
epmSola S026 p0m12R 139 15.6 WACAWACAGAAMAM
epmSobi M063 p1m14F 84 16.2 KTTNTTMTGTATGT
epmSobi M064 p1m14R 84 16.2 ACATACAKAANAAM
epmSobi M021 p0m10F 414 15.8 KTTCTGYTGTNTTT
epmSobi M022 p0m10R 414 15.8 AAANACARCAGAAM
epmSobi M019 p0m09F 495 16.1 KYTGTNCTGTNTTT
epmSobi M020 p0m09R 495 16.1 AAANACAGNACARM
KYKS

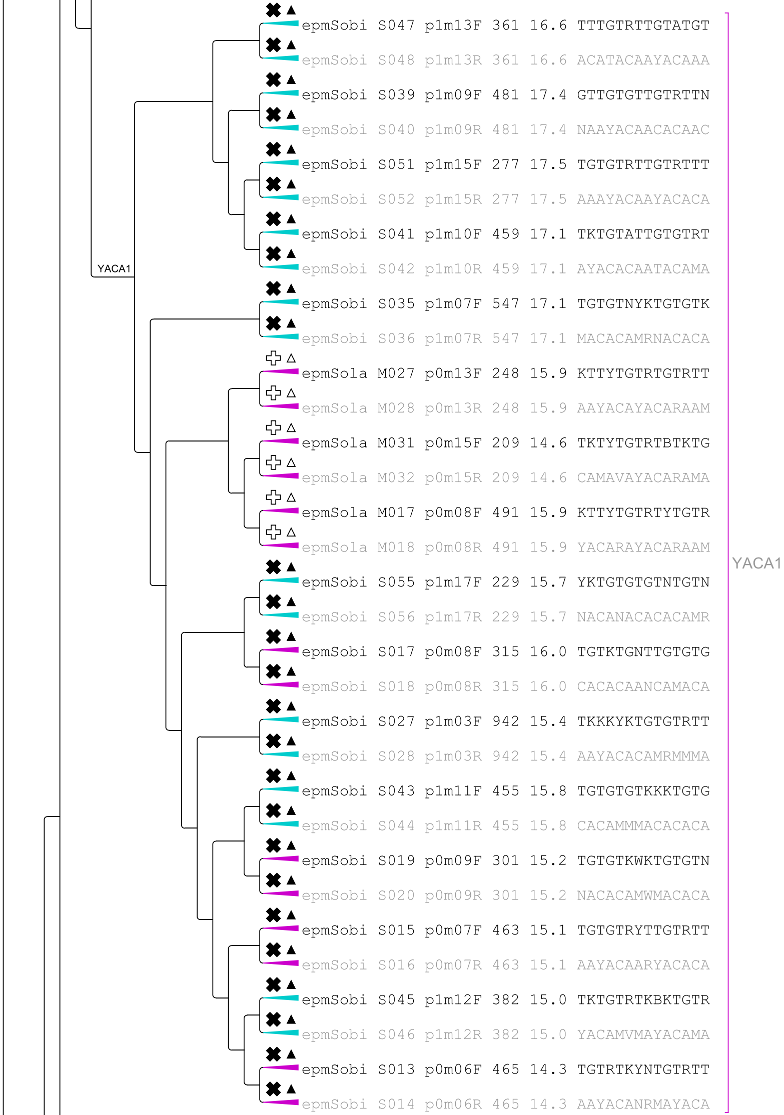
YACA1
epmSobi S047 p1m13F 361 16.6 TTTGTRTTGTATGT
epmSobi S048 p1m13R 361 16.6 ACATACAAYACAAA
epmSobi S039 p1m09F 481 17.4 GTTGTGTTGTRTTN
epmSobi S040 p1m09R 481 17.4 NAAYACAACACAAC
epmSobi S051 p1m15F 277 17.5 TGTGTRTTGTRTTT
epmSobi S052 p1m15R 277 17.5 AAAYACAAYACACA
epmSobi S041 p1m10F 459 17.1 TKTGTATTGTGTRT
epmSobi S042 p1m10R 459 17.1 AYACACAATACAMA
epmSobi S035 p1m07F 547 17.1 TGTGTNYKTGTGTK
epmSobi S036 p1m07R 547 17.1 MACACAMRNACACA
epmSola M027 p0m13F 248 15.9 KTTYTGTRTGTRTT
epmSola M028 p0m13R 248 15.9 AAYACAYACARAAM
epmSola M031 p0m15F 209 14.6 TKTYTGTRTBTKTG
epmSola M032 p0m15R 209 14.6 CAMAVAYACARAMA
epmSola M017 p0m08F 491 15.9 KTTYTGTRTYTGTR
epmSola M018 p0m08R 491 15.9 YACARAYACARAAM
epmSobi S055 p1m17F 229 15.7 YKTGTGTGTNTGTN
epmSobi S056 p1m17R 229 15.7 NACANACACACAMR
epmSobi S017 p0m08F 315 16.0 TGTKTGNTTGTGTG
epmSobi S018 p0m08R 315 16.0 CACACAANCAMACA
epmSobi S027 p1m03F 942 15.4 TKKKYKTGTGTRTT
epmSobi S028 p1m03R 942 15.4 AAYACACAMRMMMA
epmSobi S043 p1m11F 455 15.8 TGTGTGTKKKTGTG
epmSobi S044 p1m11R 455 15.8 CACAMMMACACACA
epmSobi S019 p0m09F 301 15.2 TGTGTKWKTGTGTN
epmSobi S020 p0m09R 301 15.2 NACACAMWMACACA
epmSobi S015 p0m07F 463 15.1 TGTGTRYTTGTRTT
epmSobi S016 p0m07R 463 15.1 AAYACAARYACACA
epmSobi S045 p1m12F 382 15.0 TKTGTRTKBKTGTR
epmSobi S046 p1m12R 382 15.0 YACAMVMAYACAMA
epmSobi S013 p0m06F 465 14.3 TGTRTKYNTGTRTT
epmSobi S014 p0m06R 465 14.3 AAYACANRMAYACA
YACA1

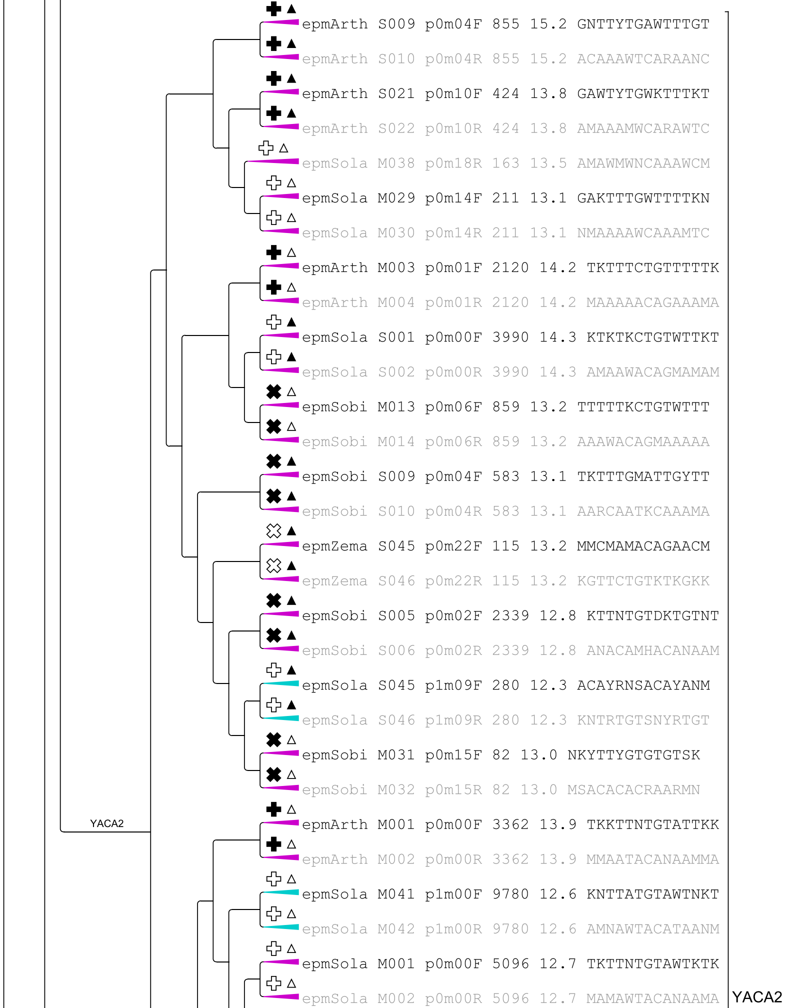
epmArth S009 p0m04F 855 15.2 GNTTYTGAWTTTGT
epmArth S010 p0m04R 855 15.2 ACAAAWTCARAANC
epmArth S021 p0m10F 424 13.8 GAWTYTGWKTTTKT
epmArth S022 p0m10R 424 13.8 AMAAAMWCARAWTC
epmSola M038 p0m18R 163 13.5 AMAWMWNCAAAWCM
epmSola M029 p0m14F 211 13.1 GAKTTTGWTTTTKN
epmSola M030 p0m14R 211 13.1 NMAAAAWCAAAMTC
epmArth M003 p0m01F 2120 14.2 TKTTTCTGTTTTTK
epmArth M004 p0m01R 2120 14.2 MAAAAACAGAAAMA
epmSola S001 p0m00F 3990 14.3 KTKTKCTGTWTTKT
epmSola S002 p0m00R 3990 14.3 AMAAWACAGMAMAM
epmSobi M013 p0m06F 859 13.2 TTTTTKCTGTWTTT
epmSobi M014 p0m06R 859 13.2 AAAWACAGMAAAAA
epmSobi S009 p0m04F 583 13.1 TKTTTGMATTGYTT
epmSobi S010 p0m04R 583 13.1 AARCAATKCAAAMA
epmZema S045 p0m22F 115 13.2 MMCMAMACAGAACM
epmZema S046 p0m22R 115 13.2 KGTTCTGTKTKGKK
epmSobi S005 p0m02F 2339 12.8 KTTNTGTDKTGTNT
epmSobi S006 p0m02R 2339 12.8 ANACAMHACANAAM
epmSola S045 p1m09F 280 12.3 ACAYRNSACAYANM
epmSola S046 p1m09R 280 12.3 KNTRTGTSNYRTGT
epmSobi M031 p0m15F 82 13.0 NKYTTYGTGTGTSK
epmSobi M032 p0m15R 82 13.0 MSACACACRAARMN
YACA2
epmArth M001 p0m00F 3362 13.9 TKKTTNTGTATTKK
epmArth M002 p0m00R 3362 13.9 MMAATACANAAMMA
epmSola M041 p1m00F 9780 12.6 KNTTATGTAWTNKT
epmSola M042 p1m00R 9780 12.6 AMNAWTACATAANM
epmSola M001 p0m00F 5096 12.7 TKTTNTGTAWTKTK
epmSola M002 p0m00R 5096 12.7 MAMAWTACANAAMA
YACA2

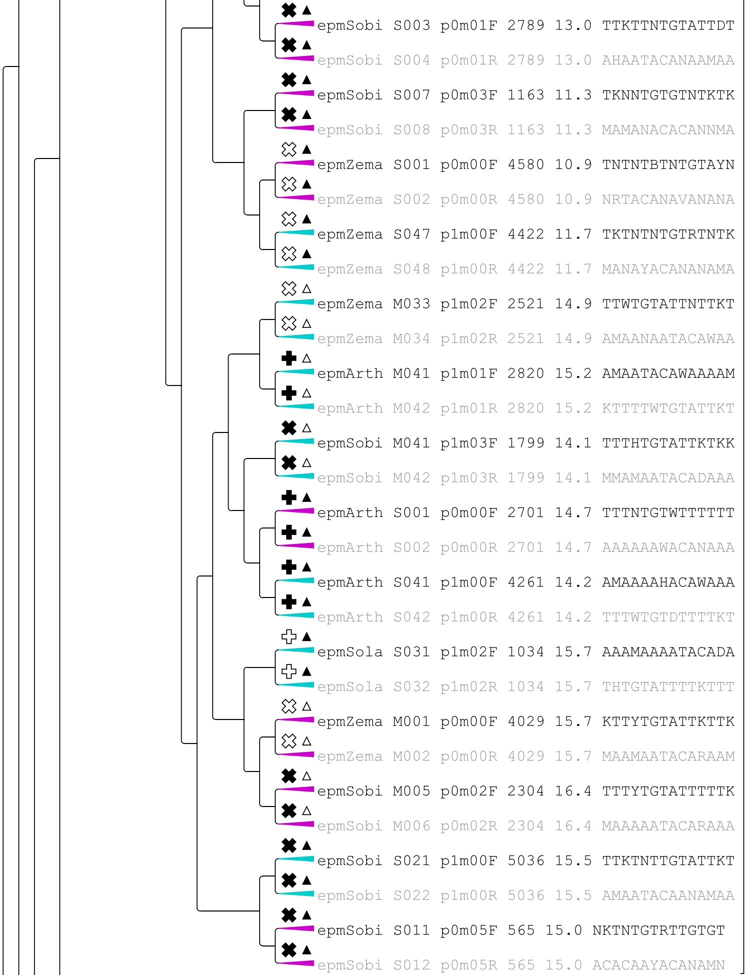
epmSobi S003 p0m01F 2789 13.0 TTKTTNTGTATTDT
epmSobi S004 p0m01R 2789 13.0 AHAATACANAAMAA
epmSobi S007 p0m03F 1163 11.3 TKNNTGTGTNTKTK
epmSobi S008 p0m03R 1163 11.3 MAMANACACANNMA
epmZema S001 p0m00F 4580 10.9 TNTNTBTNTGTAYN
epmZema S002 p0m00R 4580 10.9 NRTACANAVANANA
epmZema S047 p1m00F 4422 11.7 TKTNTNTGTRTNTK
epmZema S048 p1m00R 4422 11.7 MANAYACANANAMA
epmZema M033 p1m02F 2521 14.9 TTWTGTATTNTTKT
epmZema M034 p1m02R 2521 14.9 AMAANAATACAWAA
epmArth M041 p1m01F 2820 15.2 AMAATACAWAAAAM
epmArth M042 p1m01R 2820 15.2 KTTTTWTGTATTKT
epmSobi M041 p1m03F 1799 14.1 TTTHTGTATTKTKK
epmSobi M042 p1m03R 1799 14.1 MMAMAATACADAAA
epmArth S001 p0m00F 2701 14.7 TTTNTGTWTTTTTT
epmArth S002 p0m00R 2701 14.7 AAAAAAWACANAAA
epmArth S041 p1m00F 4261 14.2 AMAAAAHACAWAAA
epmArth S042 p1m00R 4261 14.2 TTTWTGTDTTTTKT
epmSola S031 p1m02F 1034 15.7 AAAMAAAATACADA
epmSola S032 p1m02R 1034 15.7 THTGTATTTTKTTT
epmZema M001 p0m00F 4029 15.7 KTTYTGTATTKTTK
epmZema M002 p0m00R 4029 15.7 MAAMAATACARAAM
epmSobi M005 p0m02F 2304 16.4 TTTYTGTATTTTTK
epmSobi M006 p0m02R 2304 16.4 MAAAAATACARAAA
epmSobi S021 p1m00F 5036 15.5 TTKTNTTGTATTKT
epmSobi S022 p1m00R 5036 15.5 AMAATACAANAMAA
epmSobi S011 p0m05F 565 15.0 NKTNTGTRTTGTGT
epmSobi S012 p0m05R 565 15.0 ACACAAYACANAMN

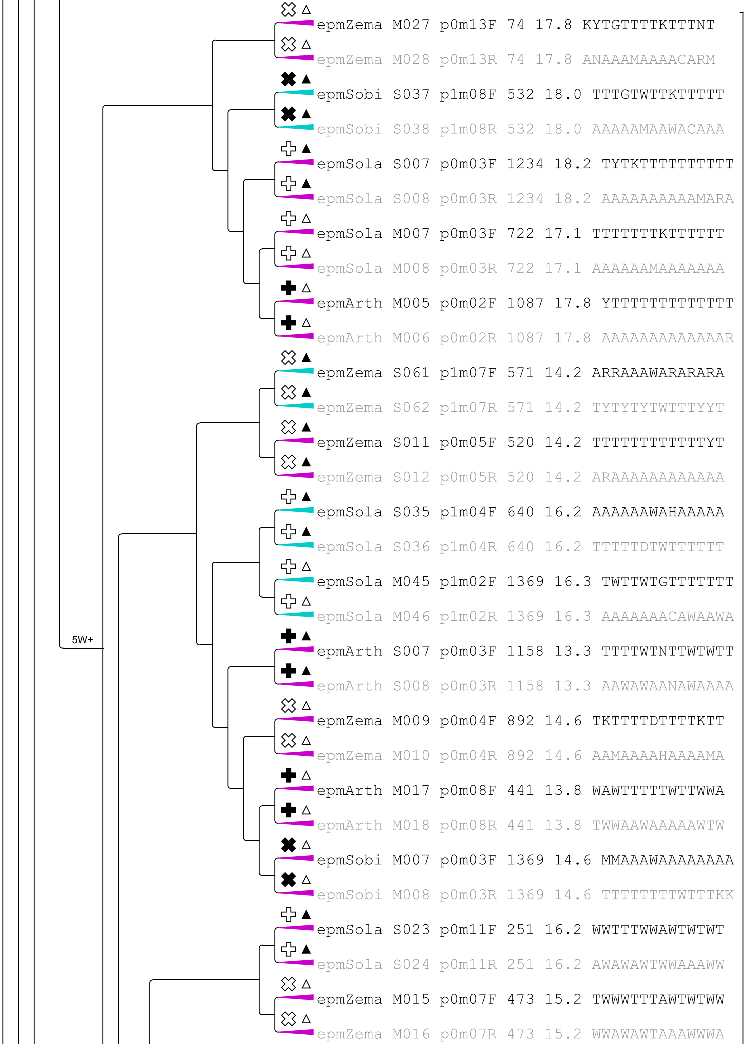
epmZema M027 p0m13F 74 17.8 KYTGTTTTKTTTNT
epmZema M028 p0m13R 74 17.8 ANAAAMAAAACARM
epmSobi S037 p1m08F 532 18.0 TTTGTWTTKTTTTT
epmSobi S038 p1m08R 532 18.0 AAAAAMAAWACAAA
epmSola S007 p0m03F 1234 18.2 TYTKTTTTTTTTTT
epmSola S008 p0m03R 1234 18.2 AAAAAAAAAAMARA
epmSola M007 p0m03F 722 17.1 TTTTTTTKTTTTTT
epmSola M008 p0m03R 722 17.1 AAAAAAMAAAAAAA
epmArth M005 p0m02F 1087 17.8 YTTTTTTTTTTTTT
epmArth M006 p0m02R 1087 17.8 AAAAAAAAAAAAAR
epmZema S061 p1m07F 571 14.2 ARRAAAWARARARA
epmZema S062 p1m07R 571 14.2 TYTYTYTWTTTYYT
epmZema S011 p0m05F 520 14.2 TTTTTTTTTTTTYT
epmZema S012 p0m05R 520 14.2 ARAAAAAAAAAAAA
epmSola S035 p1m04F 640 16.2 AAAAAAWAHAAAAA
epmSola S036 p1m04R 640 16.2 TTTTTDTWTTTTTT
epmSola M045 p1m02F 1369 16.3 TWTTWTGTTTTTTT
epmSola M046 p1m02R 1369 16.3 AAAAAAACAWAAWA
epmArth S007 p0m03F 1158 13.3 TTTTWTNTTWTWTT
epmArth S008 p0m03R 1158 13.3 AAWAWAANAWAAAA
epmZema M009 p0m04F 892 14.6 TKTTTTDTTTTKTT
epmZema M010 p0m04R 892 14.6 AAMAAAAHAAAAMA
epmArth M017 p0m08F 441 13.8 WAWTTTTTWTTWWA
epmArth M018 p0m08R 441 13.8 TWWAAWAAAAAWTW
epmSobi M007 p0m03F 1369 14.6 MMAAAWAAAAAAAA
epmSobi M008 p0m03R 1369 14.6 TTTTTTTTWTTTKK
epmSola S023 p0m11F 251 16.2 WWTTTWWAWTWTWT
epmSola S024 p0m11R 251 16.2 AWAWAWTWWAAAWW
epmZema M015 p0m07F 473 15.2 TWWWTTTAWTWTWW
epmZema M016 p0m07R 473 15.2 WWAWAWTAAAWWWA
5W+

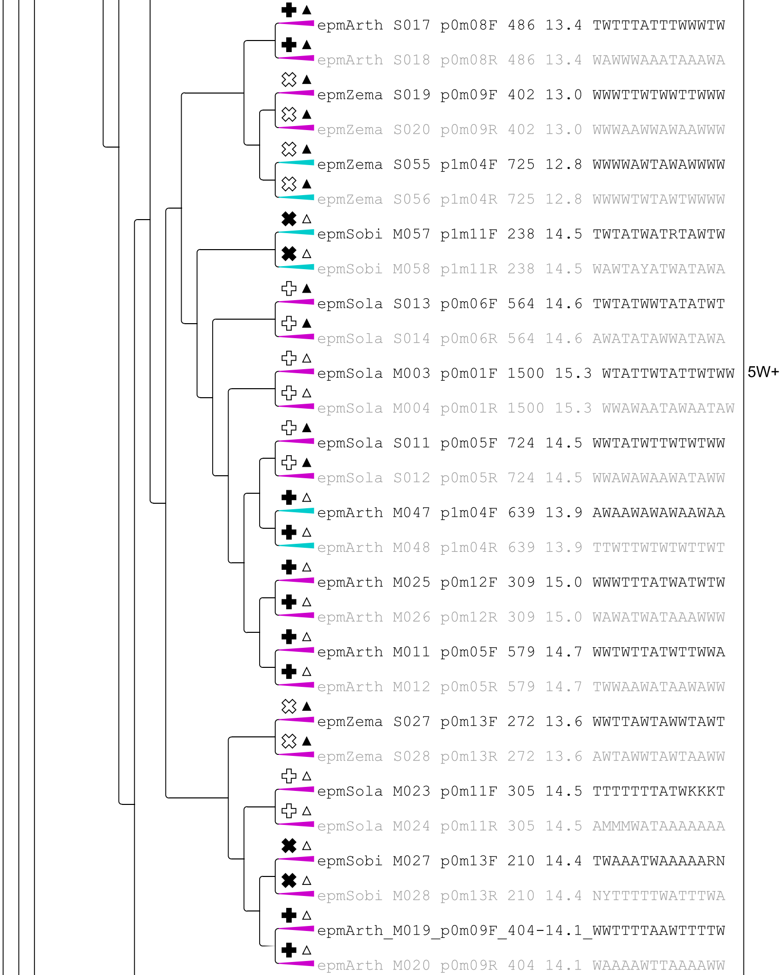
epmArth S017 p0m08F 486 13.4 TWTTTATTTWWWTW
epmArth S018 p0m08R 486 13.4 WAWWWAAATAAAWA
epmZema S019 p0m09F 402 13.0 WWWTTWTWWTTWWW
epmZema S020 p0m09R 402 13.0 WWWAAWWAWAAWWW
epmZema S055 p1m04F 725 12.8 WWWWAWTAWAWWWW
epmZema S056 p1m04R 725 12.8 WWWWTWTAWTWWWW
epmSobi M057 p1m11F 238 14.5 TWTATWATRTAWTW
epmSobi M058 p1m11R 238 14.5 WAWTAYATWATAWA
epmSola S013 p0m06F 564 14.6 TWTATWWTATATWT
epmSola S014 p0m06R 564 14.6 AWATATAWWATAWA
epmSola M003 p0m01F 1500 15.3 WTATTWTATTWTWW
epmSola M004 p0m01R 1500 15.3 WWAWAATAWAATAW
5W+
epmSola S011 p0m05F 724 14.5 WWTATWTTWTWTWW
epmSola S012 p0m05R 724 14.5 WWAWAWAAWATAWW
epmArth M047 p1m04F 639 13.9 AWAAWAWAWAAWAA
epmArth M048 p1m04R 639 13.9 TTWTTWTWTWTTWT
epmArth M025 p0m12F 309 15.0 WWWTTTATWATWTW
epmArth M026 p0m12R 309 15.0 WAWATWATAAAWWW
epmArth M011 p0m05F 579 14.7 WWTWTTATWTTWWA
epmArth M012 p0m05R 579 14.7 TWWAAWATAAWAWW
epmZema S027 p0m13F 272 13.6 WWTTAWTAWWTAWT
epmZema S028 p0m13R 272 13.6 AWTAWWTAWTAAWW
epmSola M023 p0m11F 305 14.5 TTTTTTTATWKKKT
epmSola M024 p0m11R 305 14.5 AMMMWATAAAAAAA
epmSobi M027 p0m13F 210 14.4 TWAAATWAAAAARN
epmSobi M028 p0m13R 210 14.4 NYTTTTTWATTTWA
epmArth_M019_p0m09F_404-14.1_WWTTTTAAWTTTTW
epmArth M020 p0m09R 404 14.1 WAAAAWTTAAAAWW

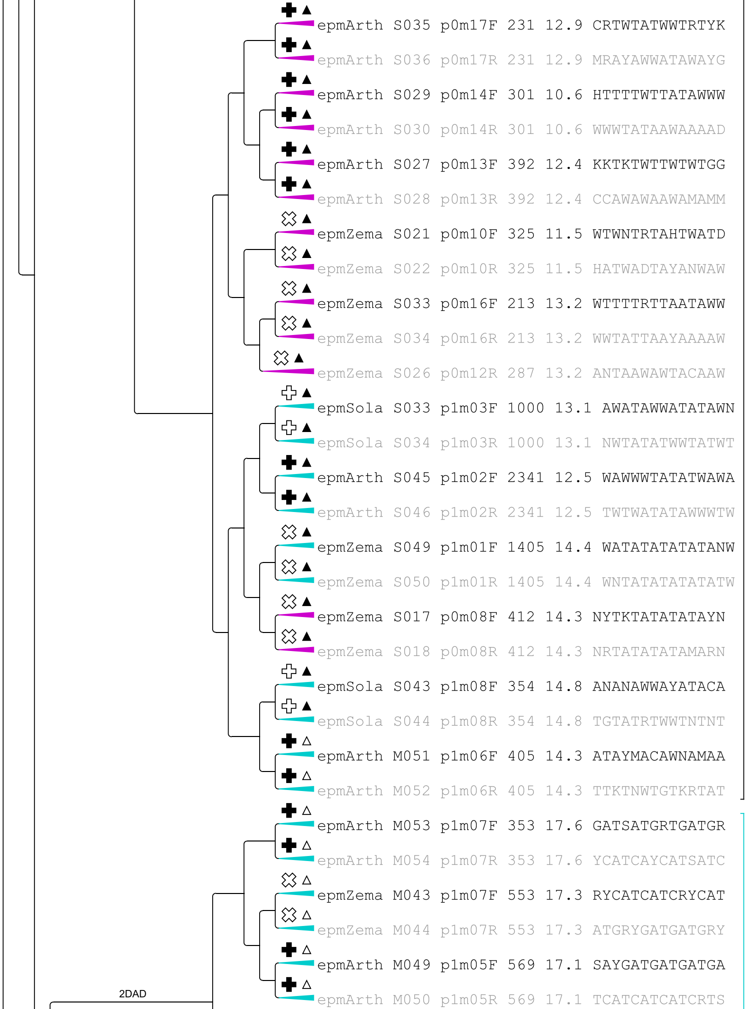
epmArth S035 p0m17F 231 12.9 CRTWTATWWTRTYK
epmArth S036 p0m17R 231 12.9 MRAYAWWATAWAYG
epmArth S029 p0m14F 301 10.6 HTTTTWTTATAWWW
epmArth S030 p0m14R 301 10.6 WWWTATAAWAAAAD
epmArth S027 p0m13F 392 12.4 KKTKTWTTWTWTGG
epmArth S028 p0m13R 392 12.4 CCAWAWAAWAMAMM
epmZema S021 p0m10F 325 11.5 WTWNTRTAHTWATD
epmZema S022 p0m10R 325 11.5 HATWADTAYANWAW
epmZema S033 p0m16F 213 13.2 WTTTTRTTAATAWW
epmZema S034 p0m16R 213 13.2 WWTATTAAYAAAAW
epmZema S026 p0m12R 287 13.2 ANTAAWAWTACAAW
epmSola S033 p1m03F 1000 13.1 AWATAWWATATAWN
epmSola S034 p1m03R 1000 13.1 NWTATATWWTATWT
epmArth S045 p1m02F 2341 12.5 WAWWWTATATWAWA
epmArth S046 p1m02R 2341 12.5 TWTWATATAWWWTW
epmZema S049 p1m01F 1405 14.4 WATATATATATANW
epmZema S050 p1m01R 1405 14.4 WNTATATATATATW
epmZema S017 p0m08F 412 14.3 NYTKTATATATAYN
epmZema S018 p0m08R 412 14.3 NRTATATATAMARN
epmSola S043 p1m08F 354 14.8 ANANAWWAYATACA
epmSola S044 p1m08R 354 14.8 TGTATRTWWTNTNT
epmArth M051 p1m06F 405 14.3 ATAYMACAWNAMAA
epmArth M052 p1m06R 405 14.3 TTKTNWTGTKRTAT
epmArth M053 p1m07F 353 17.6 GATSATGRTGATGR
epmArth M054 p1m07R 353 17.6 YCATCAYCATSATC
epmZema M043 p1m07F 553 17.3 RYCATCATCRYCAT
epmZema M044 p1m07R 553 17.3 ATGRYGATGATGRY
epmArth M049 p1m05F 569 17.1 SAYGATGATGATGA
epmArth M050 p1m05R 569 17.1 TCATCATCATCRTS
2DAD

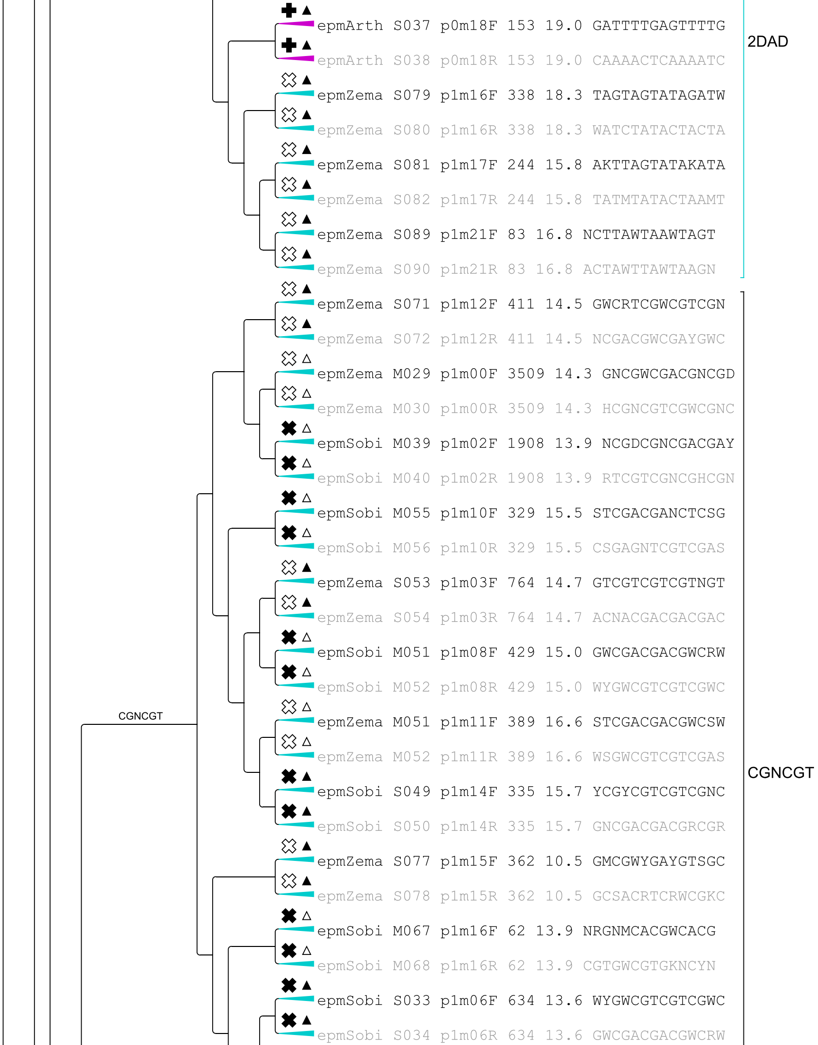
epmArth S037 p0m18F 153 19.0 GATTTTGAGTTTTG
epmArth S038 p0m18R 153 19.0 CAAAACTCAAAATC
epmZema S079 p1m16F 338 18.3 TAGTAGTATAGATW
epmZema S080 p1m16R 338 18.3 WATCTATACTACTA
epmZema S081 p1m17F 244 15.8 AKTTAGTATAKATA
epmZema S082 p1m17R 244 15.8 TATMTATACTAAMT
epmZema S089 p1m21F 83 16.8 NCTTAWTAAWTAGT
epmZema S090 p1m21R 83 16.8 ACTAWTTAWTAAGN
2DAD
epmZema S071 p1m12F 411 14.5 GWCRTCGWCGTCGN
epmZema S072 p1m12R 411 14.5 NCGACGWCGAYGWC
epmZema M029 p1m00F 3509 14.3 GNCGWCGACGNCGD
epmZema M030 p1m00R 3509 14.3 HCGNCGTCGWCGNC
epmSobi M039 p1m02F 1908 13.9 NCGDCGNCGACGAY
epmSobi M040 p1m02R 1908 13.9 RTCGTCGNCGHCGN
epmSobi M055 p1m10F 329 15.5 STCGACGANCTCSG
epmSobi M056 p1m10R 329 15.5 CSGAGNTCGTCGAS
epmZema S053 p1m03F 764 14.7 GTCGTCGTCGTNGT
epmZema S054 p1m03R 764 14.7 ACNACGACGACGAC
epmSobi M051 p1m08F 429 15.0 GWCGACGACGWCRW
epmSobi M052 p1m08R 429 15.0 WYGWCGTCGTCGWC
CGNCGT
epmZema M051 p1m11F 389 16.6 STCGACGACGWCSW
epmZema M052 p1m11R 389 16.6 WSGWCGTCGTCGAS
CGNCGT
epmSobi S049 p1m14F 335 15.7 YCGYCGTCGTCGNC
epmSobi S050 p1m14R 335 15.7 GNCGACGACGRCGR
epmZema S077 p1m15F 362 10.5 GMCGWYGAYGTSGC
epmZema S078 p1m15R 362 10.5 GCSACRTCRWCGKC
epmSobi M067 p1m16F 62 13.9 NRGNMCACGWCACG
epmSobi M068 p1m16R 62 13.9 CGTGWCGTGKNCYN
epmSobi S033 p1m06F 634 13.6 WYGWCGTCGTCGWC
epmSobi S034 p1m06R 634 13.6 GWCGACGACGWCRW

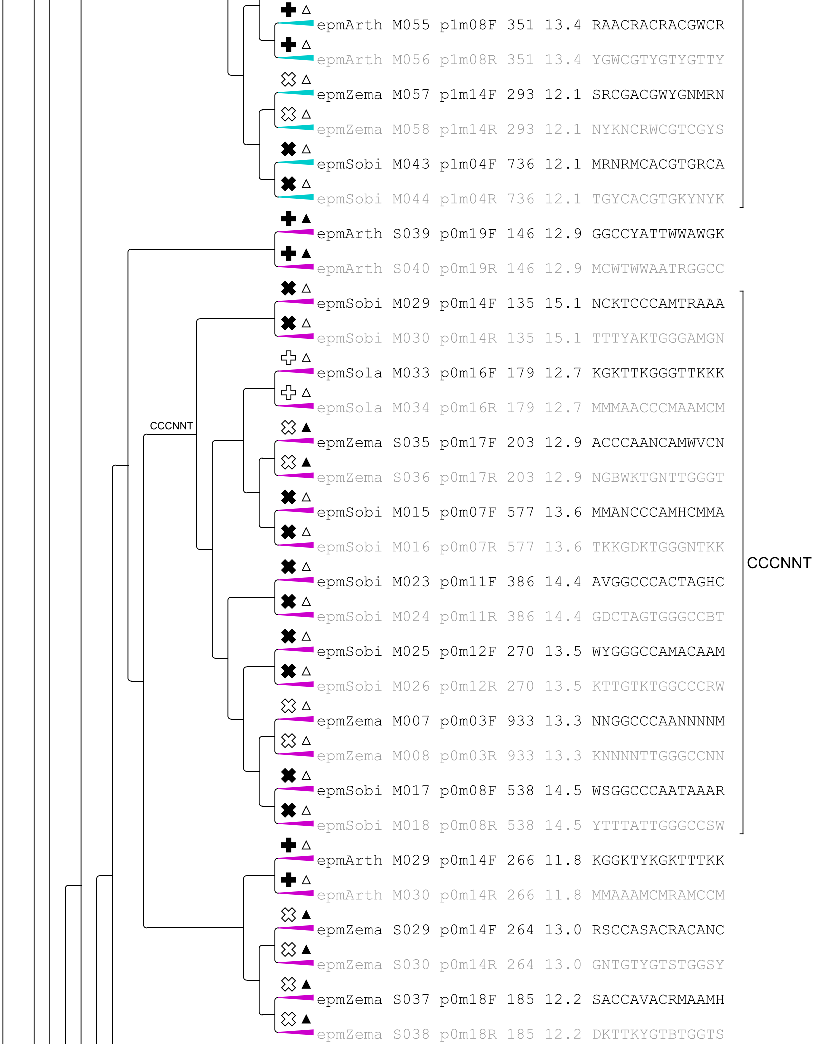
epmArth M055 p1m08F 351 13.4 RAACRACRACGWCR
epmArth M056 p1m08R 351 13.4 YGWCGTYGTYGTTY
epmZema M057 p1m14F 293 12.1 SRCGACGWYGNMRN
epmZema M058 p1m14R 293 12.1 NYKNCRWCGTCGYS
epmSobi M043 p1m04F 736 12.1 MRNRMCACGTGRCA
epmSobi M044 p1m04R 736 12.1 TGYCACGTGKYNYK
epmArth S039 p0m19F 146 12.9 GGCCYATTWWAWGK
epmArth S040 p0m19R 146 12.9 MCWTWWAATRGGCC
epmSobi M029 p0m14F 135 15.1 NCKTCCCAMTRAAA
epmSobi M030 p0m14R 135 15.1 TTTYAKTGGGAMGN
epmSola M033 p0m16F 179 12.7 KGKTTKGGGTTKKK
epmSola M034 p0m16R 179 12.7 MMMAACCCMAAMCM
epmZema S035 p0m17F 203 12.9 ACCCAANCAMWVCN
epmZema S036 p0m17R 203 12.9 NGBWKTGNTTGGGT
epmSobi M015 p0m07F 577 13.6 MMANCCCAMHCMMA
epmSobi M016 p0m07R 577 13.6 TKKGDKTGGGNTKK
epmSobi M023 p0m11F 386 14.4 AVGGCCCACTAGHC
epmSobi M024 p0m11R 386 14.4 GDCTAGTGGGCCBT
epmSobi M025 p0m12F 270 13.5 WYGGGCCAMACAAM
epmSobi M026 p0m12R 270 13.5 KTTGTKTGGCCCRW
epmZema M007 p0m03F 933 13.3 NNGGCCCAANNNNM
epmZema M008 p0m03R 933 13.3 KNNNNTTGGGCCNN
epmSobi M017 p0m08F 538 14.5 WSGGCCCAATAAAR
epmSobi M018 p0m08R 538 14.5 YTTTATTGGGCCSW
epmArth M029 p0m14F 266 11.8 KGGKTYKGKTTTKK
epmArth M030 p0m14R 266 11.8 MMAAAMCMRAMCCM
epmZema S029 p0m14F 264 13.0 RSCCASACRACANC
epmZema S030 p0m14R 264 13.0 GNTGTYGTSTGGSY
epmZema S037 p0m18F 185 12.2 SACCAVACRMAAMH
epmZema S038 p0m18R 185 12.2 DKTTKYGTBTGGTS
CCCNNT
CCCNNT

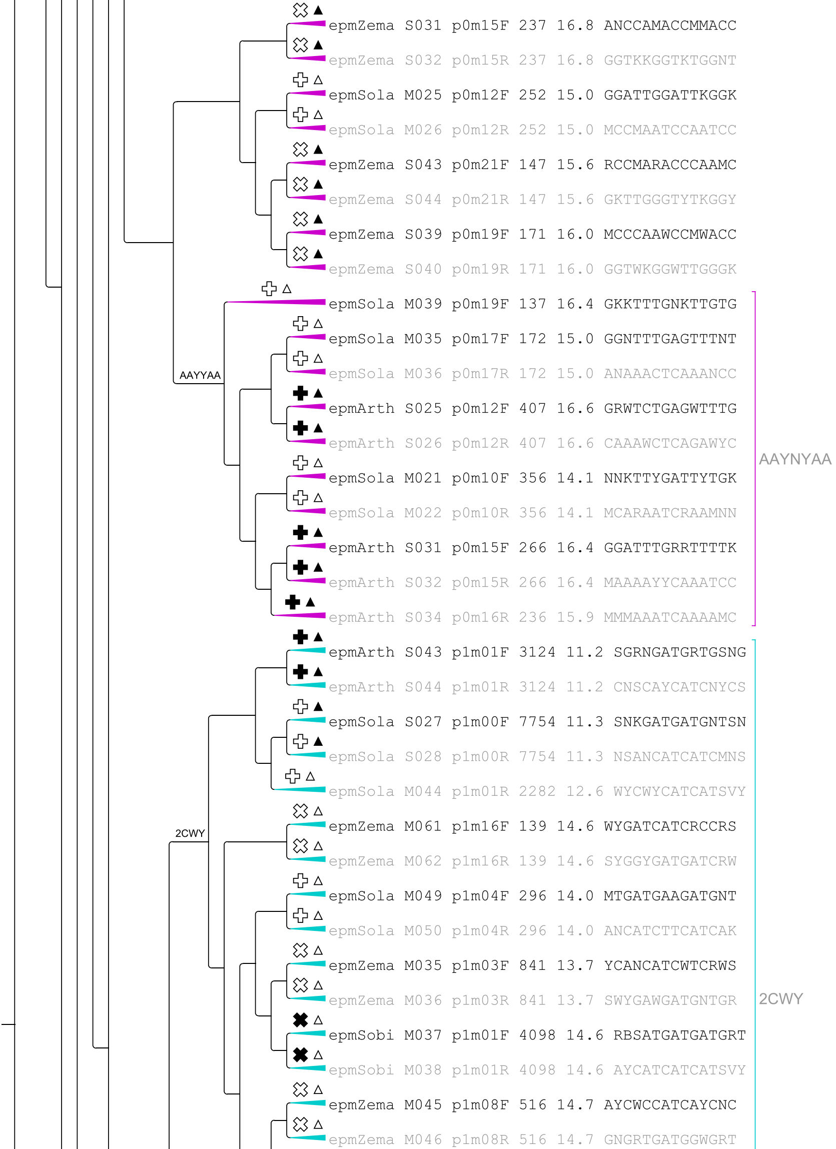
epmZema S031 p0m15F 237 16.8 ANCCAMACCMMACC
epmZema S032 p0m15R 237 16.8 GGTKKGGTKTGGNT
epmSola M025 p0m12F 252 15.0 GGATTGGATTKGGK
epmSola M026 p0m12R 252 15.0 MCCMAATCCAATCC
epmZema S043 p0m21F 147 15.6 RCCMARACCCAAMC
epmZema S044 p0m21R 147 15.6 GKTTGGGTYTKGGY
epmZema S039 p0m19F 171 16.0 MCCCAAWCCMWACC
epmZema S040 p0m19R 171 16.0 GGTWKGGWTTGGGK
epmSola M039 p0m19F 137 16.4 GKKTTTGNKTTGTG
epmSola M035 p0m17F 172 15.0 GGNTTTGAGTTTNT
epmSola M036 p0m17R 172 15.0 ANAAACTCAAANCC
epmArth S025 p0m12F 407 16.6 GRWTCTGAGWTTTG
epmArth S026 p0m12R 407 16.6 CAAAWCTCAGAWYC
epmSola M021 p0m10F 356 14.1 NNKTTYGATTYTGK
epmSola M022 p0m10R 356 14.1 MCARAATCRAAMNN
epmArth S031 p0m15F 266 16.4 GGATTTGRRTTTTK
epmArth S032 p0m15R 266 16.4 MAAAAYYCAAATCC
epmArth S034 p0m16R 236 15.9 MMMAAATCAAAAMC
epmArth S043 p1m01F 3124 11.2 SGRNGATGRTGSNG
epmArth S044 p1m01R 3124 11.2 CNSCAYCATCNYCS
epmSola S027 p1m00F 7754 11.3 SNKGATGATGNTSN
epmSola S028 p1m00R 7754 11.3 NSANCATCATCMNS
epmSola M044 p1m01R 2282 12.6 WYCWYCATCATSVY
epmZema M061 p1m16F 139 14.6 WYGATCATCRCCRS
epmZema M062 p1m16R 139 14.6 SYGGYGATGATCRW
epmSola M049 p1m04F 296 14.0 MTGATGAAGATGNT
epmSola M050 p1m04R 296 14.0 ANCATCTTCATCAK
epmZema M035 p1m03F 841 13.7 YCANCATCWTCRWS
epmZema M036 p1m03R 841 13.7 SWYGAWGATGNTGR
epmSobi M037 p1m01F 4098 14.6 RBSATGATGATGRT
epmSobi M038 p1m01R 4098 14.6 AYCATCATCATSVY
epmZema M045 p1m08F 516 14.7 AYCWCCATCAYCNC
epmZema M046 p1m08R 516 14.7 GNGRTGATGGWGRT
AAYYAA
AAYNYAA
2CWY
2CWY

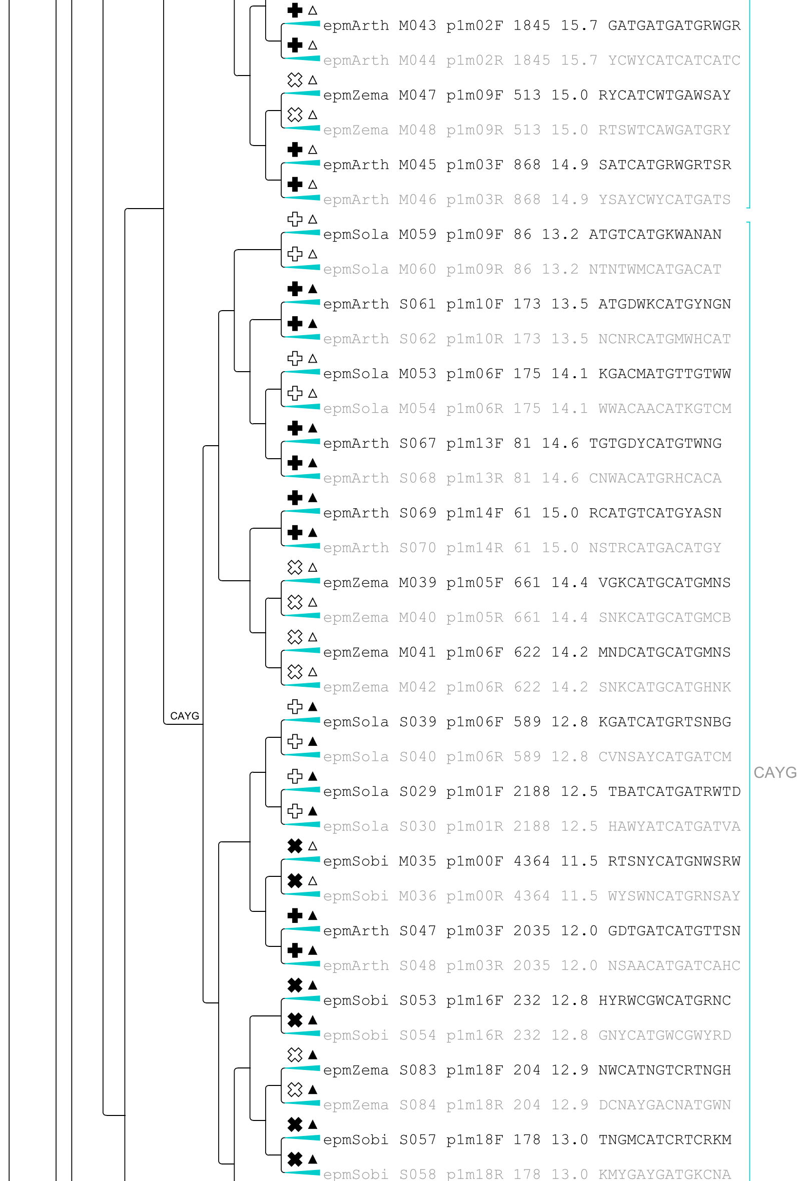
epmArth M043 p1m02F 1845 15.7 GATGATGATGRWGR
epmArth M044 p1m02R 1845 15.7 YCWYCATCATCATC
epmZema M047 p1m09F 513 15.0 RYCATCWTGAWSAY
epmZema M048 p1m09R 513 15.0 RTSWTCAWGATGRY
epmArth M045 p1m03F 868 14.9 SATCATGRWGRTSR
epmArth M046 p1m03R 868 14.9 YSAYCWYCATGATS
epmSola M059 p1m09F 86 13.2 ATGTCATGKWANAN
epmSola M060 p1m09R 86 13.2 NTNTWMCATGACAT
epmArth S061 p1m10F 173 13.5 ATGDWKCATGYNGN
epmArth S062 p1m10R 173 13.5 NCNRCATGMWHCAT
epmSola M053 p1m06F 175 14.1 KGACMATGTTGTWW
epmSola M054 p1m06R 175 14.1 WWACAACATKGTCM
epmArth S067 p1m13F 81 14.6 TGTGDYCATGTWNG
epmArth S068 p1m13R 81 14.6 CNWACATGRHCACA
epmArth S069 p1m14F 61 15.0 RCATGTCATGYASN
epmArth S070 p1m14R 61 15.0 NSTRCATGACATGY
epmZema M039 p1m05F 661 14.4 VGKCATGCATGMNS
epmZema M040 p1m05R 661 14.4 SNKCATGCATGMCB
epmZema M041 p1m06F 622 14.2 MNDCATGCATGMNS
epmZema M042 p1m06R 622 14.2 SNKCATGCATGHNK
CAYG
epmSola S039 p1m06F 589 12.8 KGATCATGRTSNBG
epmSola S040 p1m06R 589 12.8 CVNSAYCATGATCM
epmSola S029 p1m01F 2188 12.5 TBATCATGATRWTD
epmSola S030 p1m01R 2188 12.5 HAWYATCATGATVA
epmSobi M035 p1m00F 4364 11.5 RTSNYCATGNWSRW
epmSobi M036 p1m00R 4364 11.5 WYSWNCATGRNSAY
epmArth S047 p1m03F 2035 12.0 GDTGATCATGTTSN
epmArth S048 p1m03R 2035 12.0 NSAACATGATCAHC
epmSobi S053 p1m16F 232 12.8 HYRWCGWCATGRNC
epmSobi S054 p1m16R 232 12.8 GNYCATGWCGWYRD
epmZema S083 p1m18F 204 12.9 NWCATNGTCRTNGH
epmZema S084 p1m18R 204 12.9 DCNAYGACNATGWN
epmSobi S057 p1m18F 178 13.0 TNGMCATCRTCRKM
epmSobi S058 p1m18R 178 13.0 KMYGAYGATGKCNA
CAYG

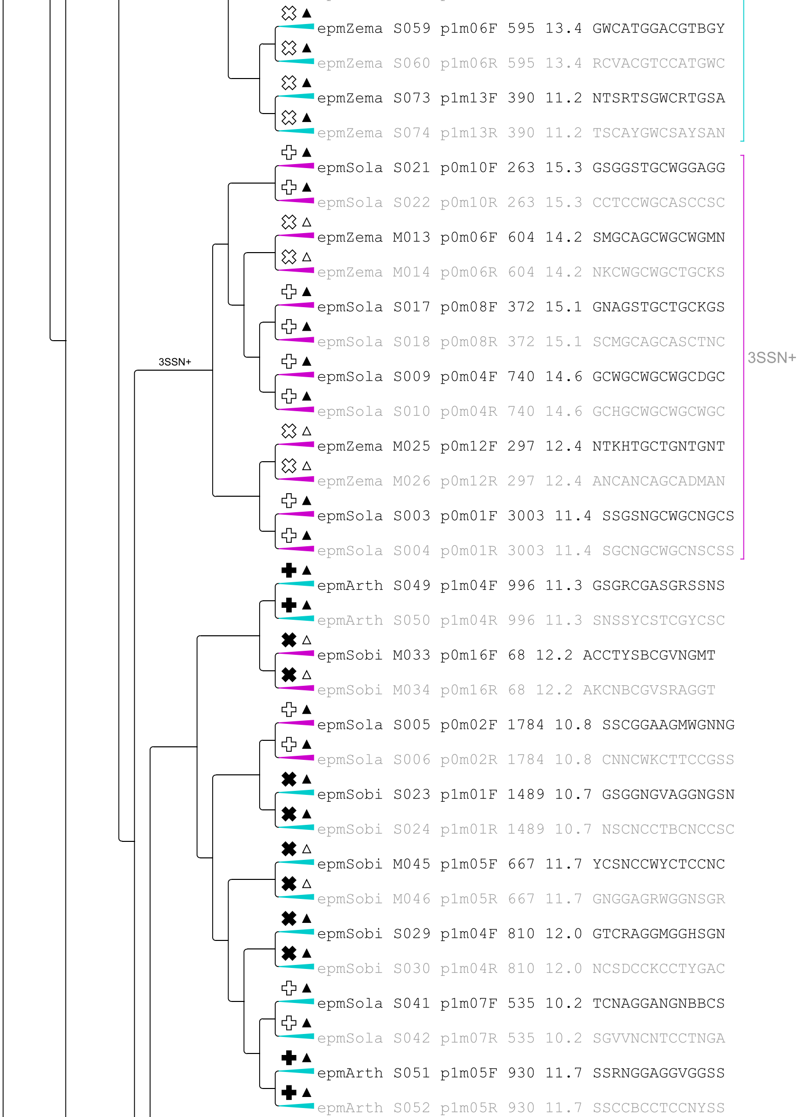
epmZema S059 p1m06F 595 13.4 GWCATGGACGTBGY
epmZema S060 p1m06R 595 13.4 RCVACGTCCATGWC
epmZema S073 p1m13F 390 11.2 NTSRTSGWCRTGSA
epmZema S074 p1m13R 390 11.2 TSCAYGWCSAYSAN
epmSola S021 p0m10F 263 15.3 GSGGSTGCWGGAGG
epmSola S022 p0m10R 263 15.3 CCTCCWGCASCCSC
epmZema M013 p0m06F 604 14.2 SMGCAGCWGCWGMN
epmZema M014 p0m06R 604 14.2 NKCWGCWGCTGCKS
epmSola S017 p0m08F 372 15.1 GNAGSTGCTGCKGS
epmSola S018 p0m08R 372 15.1 SCMGCAGCASCTNC
epmSola S009 p0m04F 740 14.6 GCWGCWGCWGCDGC
epmSola S010 p0m04R 740 14.6 GCHGCWGCWGCWGC
epmZema M025 p0m12F 297 12.4 NTKHTGCTGNTGNT
epmZema M026 p0m12R 297 12.4 ANCANCAGCADMAN
epmSola S003 p0m01F 3003 11.4 SSGSNGCWGCNGCS
epmSola S004 p0m01R 3003 11.4 SGCNGCWGCNSCSS
epmArth S049 p1m04F 996 11.3 GSGRCGASGRSSNS
epmArth S050 p1m04R 996 11.3 SNSSYCSTCGYCSC
epmSobi M033 p0m16F 68 12.2 ACCTYSBCGVNGMT
epmSobi M034 p0m16R 68 12.2 AKCNBCGVSRAGGT
epmSola S005 p0m02F 1784 10.8 SSCGGAAGMWGNNG
epmSola S006 p0m02R 1784 10.8 CNNCWKCTTCCGSS
epmSobi S023 p1m01F 1489 10.7 GSGGNGVAGGNGSN
epmSobi S024 p1m01R 1489 10.7 NSCNCCTBCNCCSC
epmSobi M045 p1m05F 667 11.7 YCSNCCWYCTCCNC
epmSobi M046 p1m05R 667 11.7 GNGGAGRWGGNSGR
epmSobi S029 p1m04F 810 12.0 GTCRAGGMGGHSGN
epmSobi S030 p1m04R 810 12.0 NCSDCCKCCTYGAC
epmSola S041 p1m07F 535 10.2 TCNAGGANGNBBCS
epmSola S042 p1m07R 535 10.2 SGVVNCNTCCTNGA
epmArth S051 p1m05F 930 11.7 SSRNGGAGGVGGSS
epmArth S052 p1m05R 930 11.7 SSCCBCCTCCNYSS
3SSN+
3SSN+

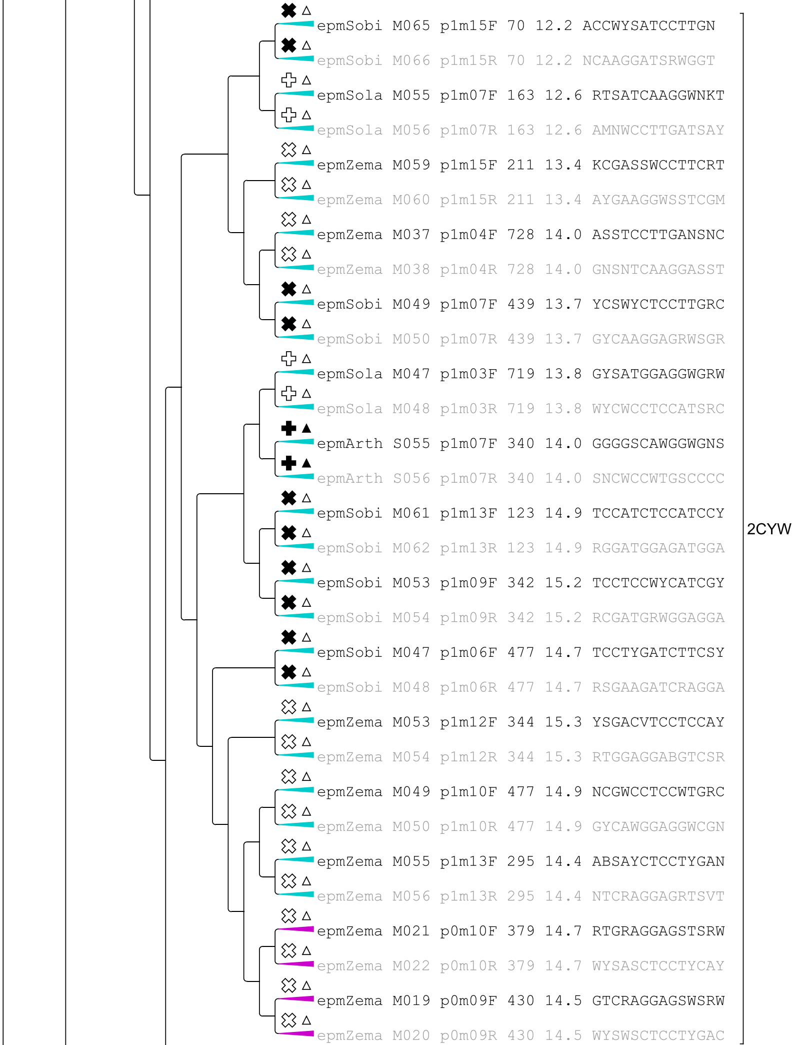
epmSobi M065 p1m15F 70 12.2 ACCWYSATCCTTGN
epmSobi M066 p1m15R 70 12.2 NCAAGGATSRWGGT
epmSola M055 p1m07F 163 12.6 RTSATCAAGGWNKT
epmSola M056 p1m07R 163 12.6 AMNWCCTTGATSAY
epmZema M059 p1m15F 211 13.4 KCGASSWCCTTCRT
epmZema M060 p1m15R 211 13.4 AYGAAGGWSSTCGM
epmZema M037 p1m04F 728 14.0 ASSTCCTTGANSNC
epmZema M038 p1m04R 728 14.0 GNSNTCAAGGASST
epmSobi M049 p1m07F 439 13.7 YCSWYCTCCTTGRC
epmSobi M050 p1m07R 439 13.7 GYCAAGGAGRWSGR
epmSola M047 p1m03F 719 13.8 GYSATGGAGGWGRW
epmSola M048 p1m03R 719 13.8 WYCWCCTCCATSRC
epmArth S055 p1m07F 340 14.0 GGGGSCAWGGWGNS
epmArth S056 p1m07R 340 14.0 SNCWCCWTGSCCCC
epmSobi M061 p1m13F 123 14.9 TCCATCTCCATCCY
epmSobi M062 p1m13R 123 14.9 RGGATGGAGATGGA
epmSobi M053 p1m09F 342 15.2 TCCTCCWYCATCGY
epmSobi M054 p1m09R 342 15.2 RCGATGRWGGAGGA
epmSobi M047 p1m06F 477 14.7 TCCTYGATCTTCSY
epmSobi M048 p1m06R 477 14.7 RSGAAGATCRAGGA
epmZema M053 p1m12F 344 15.3 YSGACVTCCTCCAY
epmZema M054 p1m12R 344 15.3 RTGGAGGABGTCSR
epmZema M049 p1m10F 477 14.9 NCGWCCTCCWTGRC
epmZema M050 p1m10R 477 14.9 GYCAWGGAGGWCGN
epmZema M055 p1m13F 295 14.4 ABSAYCTCCTYGAN
epmZema M056 p1m13R 295 14.4 NTCRAGGAGRTSVT
epmZema M021 p0m10F 379 14.7 RTGRAGGAGSTSRW
epmZema M022 p0m10R 379 14.7 WYSASCTCCTYCAY
epmZema M019 p0m09F 430 14.5 GTCRAGGAGSWSRW
epmZema M020 p0m09R 430 14.5 WYSWSCTCCTYGAC
2CYW

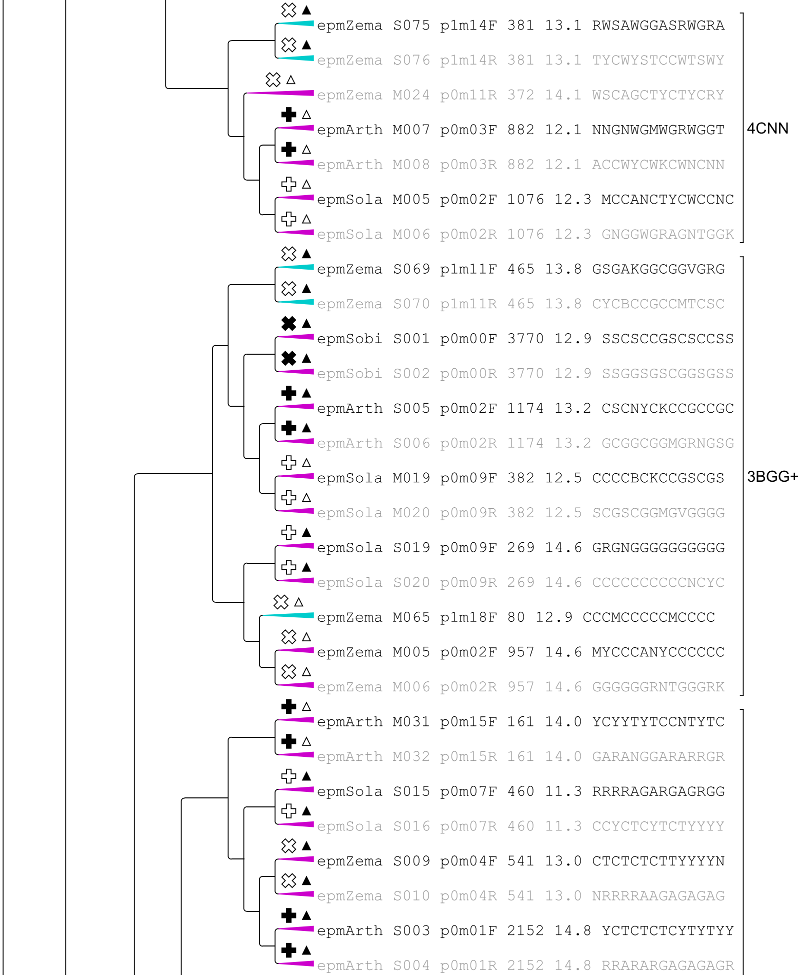
epmZema S075 p1m14F 381 13.1 RWSAWGGASRWGRA
epmZema S076 p1m14R 381 13.1 TYCWYSTCCWTSWY
epmZema M024 p0m11R 372 14.1 WSCAGCTYCTYCRY
epmArth M007 p0m03F 882 12.1 NNGNWGMWGRWGGT
epmArth M008 p0m03R 882 12.1 ACCWYCWKCWNCNN
epmSola M005 p0m02F 1076 12.3 MCCANCTYCWCCNC
epmSola M006 p0m02R 1076 12.3 GNGGWGRAGNTGGK
4CNN
epmZema S069 p1m11F 465 13.8 GSGAKGGCGGVGRG
epmZema S070 p1m11R 465 13.8 CYCBCCGCCMTCSC
epmSobi S001 p0m00F 3770 12.9 SSCSCCGSCSCCSS
epmSobi S002 p0m00R 3770 12.9 SSGGSGSCGGSGSS
epmArth S005 p0m02F 1174 13.2 CSCNYCKCCGCCGC
epmArth S006 p0m02R 1174 13.2 GCGGCGGMGRNGSG
epmSola M019 p0m09F 382 12.5 CCCCBCKCCGSCGS
epmSola M020 p0m09R 382 12.5 SCGSCGGMGVGGGG
epmSola S019 p0m09F 269 14.6 GRGNGGGGGGGGGG
epmSola S020 p0m09R 269 14.6 CCCCCCCCCCNCYC
epmZema M065 p1m18F 80 12.9 CCCMCCCCCMCCCC
epmZema M005 p0m02F 957 14.6 MYCCCANYCCCCCC
epmZema M006 p0m02R 957 14.6 GGGGGGRNTGGGRK
3BGG+
epmArth M031 p0m15F 161 14.0 YCYYYTYTCCNTYTC
epmArth M032 p0m15R 161 14.0 GARANGGARARRGR
epmSola S015 p0m07F 460 11.3 RRRRAGARGAGRGG
epmSola S016 p0m07R 460 11.3 CCYCTCYTCTYYYY
epmZema S009 p0m04F 541 13.0 CTCTCTCTTYYYYN
epmZema S010 p0m04R 541 13.0 NRRRRAAGAGAGAG
epmArth S003 p0m01F 2152 14.8 YCTCTCTCYTYTYY
epmArth S004 p0m01R 2152 14.8 RRARARGAGAGAGR

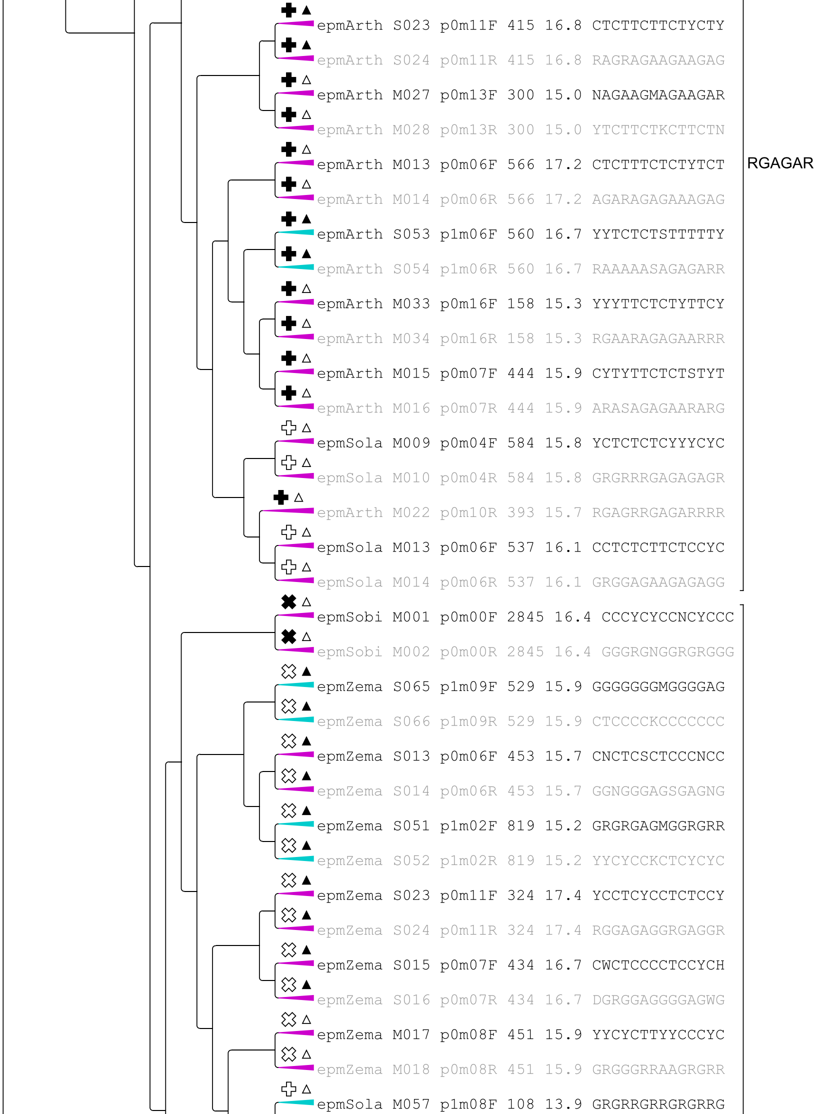
epmArth S023 p0m11F 415 16.8 CTCTTCTTCTYCTY
epmArth S024 p0m11R 415 16.8 RAGRAGAAGAAGAG
epmArth M027 p0m13F 300 15.0 NAGAAGMAGAAGAR
epmArth M028 p0m13R 300 15.0 YTCTTCTKCTTCTN
epmArth M013 p0m06F 566 17.2 CTCTTTCTCTYTCT
epmArth M014 p0m06R 566 17.2 AGARAGAGAAAGAG
epmArth S053 p1m06F 560 16.7 YYTCTCTSTTTTTY
epmArth S054 p1m06R 560 16.7 RAAAAASAGAGARR
epmArth M033 p0m16F 158 15.3 YYYTTCTCTYTTCY
epmArth M034 p0m16R 158 15.3 RGAARAGAGAARRR
epmArth M015 p0m07F 444 15.9 CYTYTTCTCTSTYT
epmArth M016 p0m07R 444 15.9 ARASAGAGAARARG
epmSola M009 p0m04F 584 15.8 YCTCTCTCYYYCYC
epmSola M010 p0m04R 584 15.8 GRGRRRGAGAGAGR
epmArth M022 p0m10R 393 15.7 RGAGRRGAGARRRR
epmSola M013 p0m06F 537 16.1 CCTCTCTTCTCCYC
epmSola M014 p0m06R 537 16.1 GRGGAGAAGAGAGG
RGAGAR
epmSobi M001 p0m00F 2845 16.4 CCCYCYCCNCYCCC
epmSobi M002 p0m00R 2845 16.4 GGGRGNGGRGRGGG
epmZema S065 p1m09F 529 15.9 GGGGGGGMGGGGAG
epmZema S066 p1m09R 529 15.9 CTCCCCKCCCCCCC
epmZema S013 p0m06F 453 15.7 CNCTCSCTCCCNCC
epmZema S014 p0m06R 453 15.7 GGNGGGAGSGAGNG
epmZema S051 p1m02F 819 15.2 GRGRGAGMGGRGRR
epmZema S052 p1m02R 819 15.2 YYCYCCKCTCYCYC
epmZema S023 p0m11F 324 17.4 YCCTCYCCTCTCCY
epmZema S024 p0m11R 324 17.4 RGGAGAGGRGAGGR
epmZema S015 p0m07F 434 16.7 CWCTCCCCTCCYCH
epmZema S016 p0m07R 434 16.7 DGRGGAGGGGAGWG
epmZema M017 p0m08F 451 15.9 YYCYCTTYYCCCYC
epmZema M018 p0m08R 451 15.9 GRGGGRRAAGRGRR
epmSola M057 p1m08F 108 13.9 GRGRRGRRGRGRRG

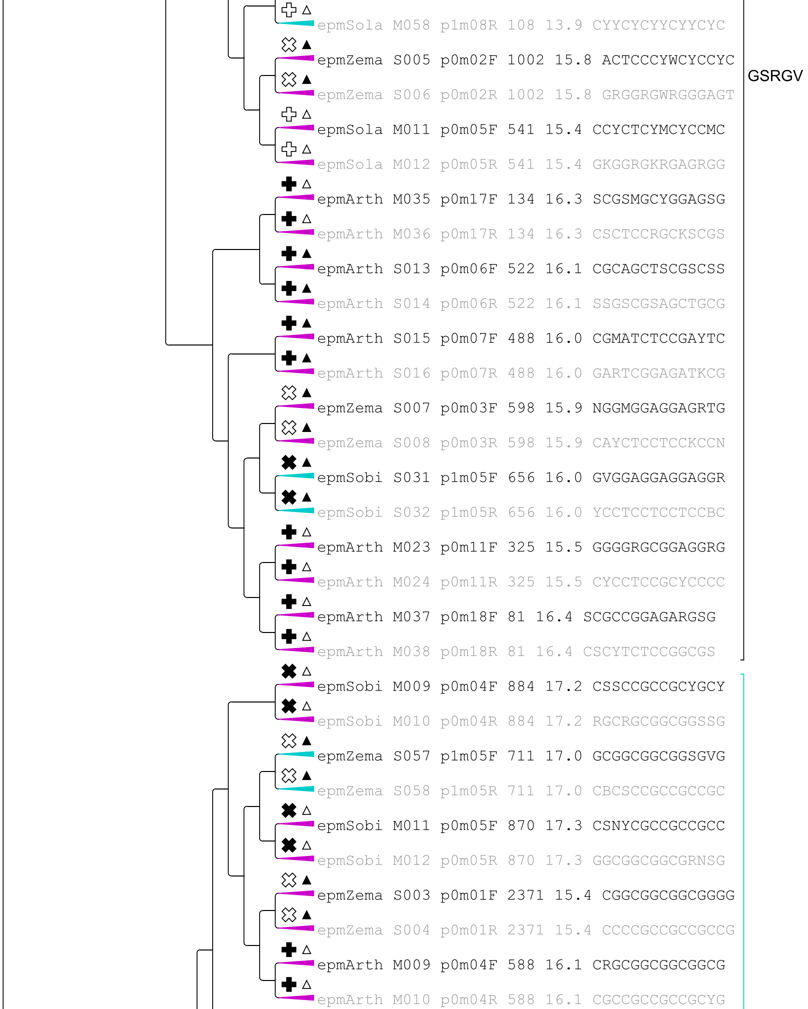
epmSola M058 p1m08R 108 13.9 CYYCYCYYCYYCYC
epmZema S005 p0m02F 1002 15.8 ACTCCCYWCYCCYC
epmZema S006 p0m02R 1002 15.8 GRGGRGWRGGGAGT
epmSola M011 p0m05F 541 15.4 CCYCTCYMCYCCMC
epmSola M012 p0m05R 541 15.4 GKGGRGKRGAGRGG
epmArth M035 p0m17F 134 16.3 SCGSMGCYGGAGSG
epmArth M036 p0m17R 134 16.3 CSCTCCRGCKSCGS
epmArth S013 p0m06F 522 16.1 CGCAGCTSCGSCSS
epmArth S014 p0m06R 522 16.1 SSGSCGSAGCTGCG
epmArth S015 p0m07F 488 16.0 CGMATCTCCGAYTC
epmArth S016 p0m07R 488 16.0 GARTCGGAGATKCG
epmZema S007 p0m03F 598 15.9 NGGMGGAGGAGRTG
epmZema S008 p0m03R 598 15.9 CAYCTCCTCCKCCN
epmSobi S031 p1m05F 656 16.0 GVGGAGGAGGAGGR
epmSobi S032 p1m05R 656 16.0 YCCTCCTCCTCCBC
epmArth M023 p0m11F 325 15.5 GGGGRGCGGAGGRG
epmArth M024 p0m11R 325 15.5 CYCCTCCGCYCCCC
epmArth M037 p0m18F 81 16.4 SCGCCGGAGARGSG
epmArth M038 p0m18R 81 16.4 CSCYTCTCCGGCGS
GSRGV
epmSobi M009 p0m04F 884 17.2 CSSCCGCCGCYGCY
epmSobi M010 p0m04R 884 17.2 RGCRGCGGCGGSSG
epmZema S057 p1m05F 711 17.0 GCGGCGGCGGSGVG
epmZema S058 p1m05R 711 17.0 CBCSCCGCCGCCGC
epmSobi M011 p0m05F 870 17.3 CSNYCGCCGCCGCC
epmSobi M012 p0m05R 870 17.3 GGCGGCGGCGRNSG
epmZema S003 p0m01F 2371 15.4 CGGCGGCGGCGGGG
epmZema S004 p0m01R 2371 15.4 CCCCGCCGCCGCCG
epmArth M009 p0m04F 588 16.1 CRGCGGCGGCGGCG
epmArth M010 p0m04R 588 16.1 CGCCGCCGCCGCYG

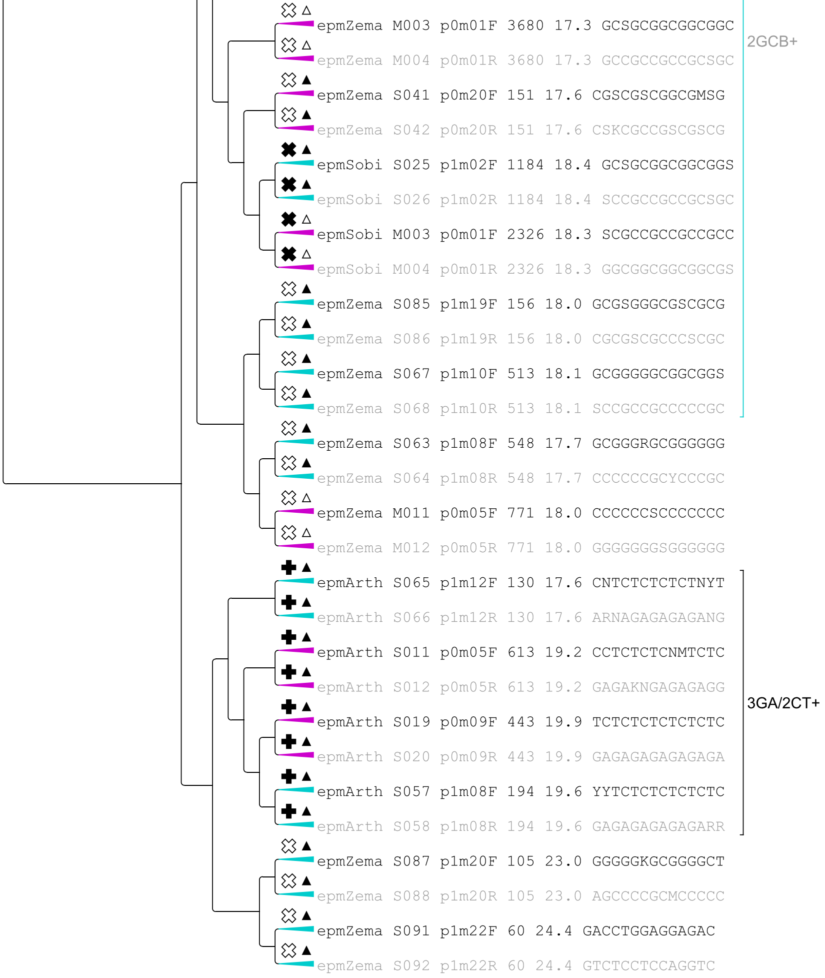
epmZema M003 p0m01F 3680 17.3 GCSGCGGCGGCGGC
epmZema M004 p0m01R 3680 17.3 GCCGCCGCCGCSGC
epmZema S041 p0m20F 151 17.6 CGSCGSCGGCGMSG
epmZema S042 p0m20R 151 17.6 CSKCGCCGSCGSCG
epmSobi S025 p1m02F 1184 18.4 GCSGCGGCGGCGGS
epmSobi S026 p1m02R 1184 18.4 SCCGCCGCCGCSGC
epmSobi M003 p0m01F 2326 18.3 SCGCCGCCGCCGCC
epmSobi M004 p0m01R 2326 18.3 GGCGGCGGCGGCGS
epmZema S085 p1m19F 156 18.0 GCGSGGGCGSCGCG
epmZema S086 p1m19R 156 18.0 CGCGSCGCCCSCGC
epmZema S067 p1m10F 513 18.1 GCGGGGGCGGCGGS
epmZema S068 p1m10R 513 18.1 SCCGCCGCCCCCGC
epmZema S063 p1m08F 548 17.7 GCGGGRGCGGGGGG
epmZema S064 p1m08R 548 17.7 CCCCCCGCYCCCGC
epmZema M011 p0m05F 771 18.0 CCCCCCSCCCCCCC
epmZema M012 p0m05R 771 18.0 GGGGGGGSGGGGGG
epmArth S065 p1m12F 130 17.6 CNTCTCTCTCTNYT
epmArth S066 p1m12R 130 17.6 ARNAGAGAGAGANG
epmArth S011 p0m05F 613 19.2 CCTCTCTCNMTCTC
epmArth S012 p0m05R 613 19.2 GAGAKNGAGAGAGG
epmArth S019 p0m09F 443 19.9 TCTCTCTCTCTCTC
epmArth S020 p0m09R 443 19.9 GAGAGAGAGAGAGA
epmArth S057 p1m08F 194 19.6 YYTCTCTCTCTCTC
epmArth S058 p1m08R 194 19.6 GAGAGAGAGAGARR
epmZema S087 p1m20F 105 23.0 GGGGGKGCGGGGCT
epmZema S088 p1m20R 105 23.0 AGCCCCGCMCCCCC
epmZema S091 p1m22F 60 24.4 GACCTGGAGGAGAC
epmZema S092 p1m22R 60 24.4 GTCTCCTCCAGGTC
2GCB+
3GA/2CT+