Research Square

Preprints are preliminary reports that have not undergone peer review.
They should not be considered conclusive, used to inform clinical practice,
or referenced by the media as validated information.

The Psychometric Properties of Children's Yale-Brown Obsessive-Compulsive Scale in Tic Disorders

Junjuan Yan
Beijing Children's Hospital
Yi Gu
Beijing Children's Hospital
Fang Wen
Beijing Children's Hospital
Liping Yu
Beijing Children's Hospital
Fang Wang
Beijing Children's Hospital
Jingran Liu
Beijing Children's Hospital
Mengyu Wang
The First Medical Center, Chinese PLA General Hospital
Jiahui Chu
Beijing Children's Hospital
Yanlin Li
Beijing Children's Hospital
Yonghua Cui
Beijing Children's Hospital
Ying Li (liying@bch.com.cn)
Beijing Children's Hospital https://orcid.org/0000-0003-4571-2637

Research article

Keywords: tic disorders, Obsessive-compulsive disorder, the Children's Yale-Brown Obsessive-Compulsive Scale, psychometric properties

Posted Date: January 23rd, 2021

DOI: https://doi.org/10.21203/rs.3.rs-149320/v1

License: This work is licensed under a Creative Commons Attribution 4.0 International License.
Read Full License

Abstract

Background: Patients with Tic Disorders (TD) usually comorbid with Obsessive-compulsive disorder (OCD). The severity of obsessive-compulsive symptoms (OCS) in TD is widely evaluated via the Children's Yale-Brown Obsessive-Compulsive Scale (CY-BOCS). However, the reliability and validity of CY-BOCS in TD patients are still unclear.

Methods: In this study, we examined the psychometric properties of the Chinese version of the CY-BOCS in patients with tic disorders.

Results: We examined the psychometric properties of the CY-BOCS in 367 patients with TD in China. We performed reliability and validity analyses on the CY-BOCS and found that the Cronbach's Alpha and the test-retest reliability of CY-BOCS were 0.809 and 0.821 respectively. The CY-BOCS showed good consistency in the two-factor structure, namely the "obsession" and the "compulsive" factors (the comparative fit index was 0.84).

Conclusion: The CY-BOCS has good psychometric properties in children and adolescents with TD. It suggests that the CY-BOCS could be widely used in Chinese children and adolescents with TD, especially for the TS patients.

1. Background

The worldwide prevalence of Tic Disorders (TD) ranges from 0.4 and 1.5% [1]. TD's common comorbidity is Obsessive-compulsive disorder (OCD) [2, 3]. The comorbid OCD in TS is up to 50% [4], and the obsessive-compulsive symptoms (OCS) is up to 90% [5]. The OCS in Tourette Syndrome (TS) are associated with poorer quality of life across the self, relationship, environment, and general domains [6]. Moreover, comorbid OCS is associated with a higher lifetime rate of other mental disorders, such as anxiety disorders, and poorer psychosocial functioning [7, 8]. Therefore, we should pay more attention to the OCS in patients with TD.

The Children's Yale-Brown Obsessive-Compulsive Scale (CY-BOCS) is the most widely used in children and pediatric OCD studies [9]. The CY-BOCS is developed from the Yale-Brown Obsessive-Compulsive Scale (Y-BOCS) [10], and it has shown excellent reliability and validity in the assessments of children and adolescents with OCD [11, 12]. CY-BOCS is considered as the gold standard for assessing OCD's severity of OCD in children and adolescents [13, 14]. Besides, the CY-BOCS is also the common rating scale for comorbidity OCS in TD patients [15–17]. However, few studies focused on the psychometric properties of CY-BOCS in patients with TD. We need further pieces of evidence on whether CY-BOCS still showed good psychometric properties in the Chinese population.

The Y-BOCS, which has the same items as the CY-BOCS, has been translated into Chinese [18–20]. The reliability and validity of the Chinese version of the Y-BOCS [21] and Y-BOCS- Second Edition [22] showed good psychometric properties. However, few studies focus on the reliability and validity of CY-BOCS in

Chinese children and adolescents with TD. Further pieces of evidence are needed to address these issues. Moreover, the east and west have shown cultural differences in many areas. For example, compared with Westerners, Chinese people prefer to be more concealing their feelings and less express inner feelings [23–25].

Therefore, this study aims to examine the reliability and validity of the CY-BOCS in patients with TD. We calculated the test-retest reliability, Cronbach's Alpha, as well as the concurrent validation. Moreover, we used confirmed factor analysis (CFA) to test its structure of CY-BOCS.

2. Materials And Methods

2.1 Participants

All the participants were recruited from the Department of Psychiatry in Beijing Children's Hospital in China from October 1, 2019, to January 1, 2020. Both inclusion and exclusion criteria were below: aged from 5 to 16 years, met the tic disorders diagnostic criteria according to DSM-5,no epilepsy, or any known comorbid brain medical conditions. TS is characterized by the presence of multiple motor tics and one or more vocal tics (not necessarily concurrently), which persists for at least one year [26]. Persistent (chronic) motor or vocal TD is characterized by the presence of single or multiple motor tics only or vocal tics only, which persist for at least one year [26]. Provisional TD is characterized by single or multiple motors with or without vocal tics that persists for less than one year [26].

The ethics committees approved this study of Beijing Children's Hospital of Capital Medical University, and we also obtained the written informed consent from the parent or guardian of the enrolled children and adolescents. Finally, we enrolled 367 children and adolescents diagnosed with TD. Furthermore, the 152 patients were diagnosed with TS based on the Statistical Manual of Mental Disorders' diagnostic criteria, fifth Edition (DSM-5).

The total sample was 367 patients diagnosed with TD, with the percentage of male 79.8%. The mean age of included patients was 9.21 ± 2.06 years old (range 5–16 years old), and the mean duration of illness was 1.93 ± 1.72 years. And the 152 TS patients with male/female ratio 4.85 (126/26) were included. The mean age of TS patients was 9.46 ± 2.18 years old, and the mean duration of illness was 2.67 ± 1.65 years.

Age is an important factor for tics in the previous study. For example, the onset age of TD is typically 3 to 10 years; the highest estimated prevalence rates is 7 to 11 years; tic severity declines with age during adolescence; the age of most patients detected the premonitory urges of tics is above 10 years old; tic-related OCD tends to have an earlier age of onset [3, 27, 28]. Therefore, we want to verify any differences in OCS between different age groups. The patients were classified to the "Younger group" (aged < 10 years, $n = 284$) and the "Older group" (aged > = 10 years, $n = 83$) to assess the validity and reliability of the CY-BOCS. We used a t-test to compare the differences between the younger and older groups to study age effects.

TS has higher tic severity and comorbidity score (compulsion, ordering, ADHD, anxiety, self-injurious behavior) than the chronic motor TD [29], and we want to know more about the characteristics of OCS in TS patients.

2.2 Measures

2.2.1 Children's Yale-Brown Obsessive-Compulsive Scale (CY-BOCS)

CY-BOCS is a semi-structured scale rating by a clinician or trained interviewer to measure the obsessive and compulsive severity during the previous week for patients with OCD aged from 8 to 16 years. The Obsessions and compulsion subtotals are derived by adding the five items (Time Occupied, Interference, Distress, Resistance, and Degree of Control, range = 0–4) related to obsessions (range = 0–20) and compulsions (range = 0–20) respectively. The total score is the sum of the obsessions and compulsion subtotals. The higher the score of CY-BOCS, the more serious of the OCS.

The CY-BOCS has the same structure and items as the Y-BOCS. The Y-BOCS has been translated into Chinese and tested the psychometric properties [21]. Therefore, two translators translated the CY-BOCS to Chinese independently based on the Chinese version Y-BOCS. Two bilingual experts were invited to check the translated version and finish the back-translated version. The translated version was then modified until it was comparable with the original English version [30].

2.2.2 The Yale Global Tic Severity Scale (YGTSS)

The YGTSS is a semi-structured scale and rated by a clinician or trained interviewer. It is developed for assessing the tics observed within l week before the assessment [31]. Five dimensions included in the YGTSS are as follows: the number, frequency, intensity, complexity, and interference. The total score of YGTSS (range: 0-100) is derived by summing the tic severity ranged between 0 and 50 (motor tics range = 0–25 and vocal tics range = 0–25) and the impairment rating score (range = 0–50). The YGTSS is a widely used scale with excellent reliability and validity for assessing children and adolescents with TD [32].

2.2.3 Premonitory Urge for Tics Scale (PUTS)

The PUTS is a nine-item scale for measuring premonitory sensations in patients with tics. Each item is rated using a 4-point scale (numerical value range = 1–4), and the total score ranged from 9 to 36 is yielded by summing the nine items—the higher scores of the PUTS, the greater severity of premonitory urges.

Besides, the three raters (Liping Yu, Fang Wen and Jingran Liu) finished the clinical assessments. The consistency coefficient between these raters was 0.873. All the participants were outpatients. The assessments were performed after diagnosis in the Psychiatric Department's psychology assessment

room in Beijing Children's Hospital by one of the two psychiatrists. Furthermore, 30 participants were randomly selected for retesting one month later to verify the test-retest reliability of the CY-BOCS.

2.3 Statistical analysis

We used the Statistical Package for the Social Sciences for Windows (SPSS Inc., Chicago, IL, USA, v25.0) to perform the statistical analyses. First, we used Pearson's correlation to examine the item-total correlation of CY-BOCS. Second, we used Cronbach's alpha/test–retest reliability to test the reliability of CY-BOCS and assess its validation by calculating the correlation coefficient between the CY-BOCS scores and the total score of YGTSS as well as PUTS. Finally, we performed the CFA of CY-BOCS in R (version 3.5.3) using the package "Lavaan".

3. Results

3.1 Clinical Characteristics of the Total Sample and Different Groups

Table 1 shows the mean and standard deviation (SD) of CY-BOCS, the obsession subscale score, and the compulsion subscale score for the different age groups. Significant differences between the younger and older groups were identified in CY-BOCS total score, the obsession subscale score, and the compulsion subscale score ($p < 0.05$). The score of the older group was higher in the CY-BOCS total score ($p = 0.000$), the obsession subscale score ($p = 0.002$), and the compulsion subscale score ($p = 0.001$) than the younger group (Table 1). In addition, the mean duration of illness for younger group was 1.68 ± 1.52 years, which was shorter than the older group (2.76 ± 2.06 years, $p < 0.001$).

Table 1
The Clinical Characteristics for Total Sample and Different Groups

Groups	N	Male/Female	Total CY-BOCS Mean(SD)	Obsession Mean (SD)	Compulsion Mean(SD)
Total Sample	367	293/74	3.93 (5.15)	1.30 (2.90)	2.68 (3.73)
TS Group	152	126/26	4.32 (5.32)	1.53 (2.96)	2.85 (3.83)
Younger Group	284	225/59	3.31 (4.53)	1.04 (2.53)	2.34 (3.51)
Older Group	83	68/15	6.02 (6.49)	2.18 (3.81)	3.84 (4.22)
P Value (Younger vs. Older)	N/A	N/A	0.000**	0.002**	0.001**

Note: CY-BOCS, Children's Yale-Brown Obsessive-Compulsive Scale; SD: Standard Deviation; TS, Tourette syndrome; N/A: Not Applicable.

3.2 Item correlations with the total score

We examined each item score's correlation and the total score of the CY-BOCS in patients with TD. All items, obsession score, compulsion score was significantly correlated with the total CY-BOCS score. The correlation between the total score of CY-BOCS and the obsession score, compulsion score, O1, O4, O5 was 0.827, 0.711, 0.716, 0.792, and 0.773 respectively (more details see Table 2).

Table 2
The Items Correlation with Total CY-BOCS

Items	Mean	SD	Skewness	Kurtosis	Correlation with CY-BOCS Total
O 1	0.41	0.506	0.533	-1.349	0.716**
O 2	0.24	0.511	2.708	9.760	0.639**
O 3	0.13	0.456	5.193	35.922	0.466**
O 4	1.05	1.383	0.846	-0.806	0.792**
O 5	1.03	1.509	1.618	3.847	0.773**
Obsession	2.85	3.825	1.017	0.126	0.827**
C 1	0.28	0.530	2.059	4.915	0.643**
C 2	0.09	0.312	3.491	12.487	0.461**
C 3	0.09	0.370	5.041	30.229	0.462**
C 4	0.54	1.048	1.750	1.838	0.697**
C 5	0.53	1.079	1.981	2.878	0.666**
Compulsion	1.53	2.959	1.854	2.675	0.711**
Note: CY-BOCS, Children's Yale-Brown Obsessive-Compulsive Scale;					
SD: Standard Deviation.					

3.3 Reliability of CY-BOCS

The Cronbach's Alpha calculated based on the total sample, TS group, younger group, and older group were 0.809, 0.807, 0.767, and 0.858. A total of 30 participants finished the one-month retest, the test-retest reliability of CY-BOCS was 0.821.

3.4 Concurrent Validation of CY-BOCS with YGTSS and PUTS/Construct validity

We evaluate the concurrent validation of the CY-BOCS based on the correlation of the total tic severity, impairment, total YGTSS score, and PUTS with the obsession score, the compulsion score, and the total CY-BOCS score. The total CY-BOCS score was significant correlated with the total YGTSS score and the PUTS score (Table 3).

Table 3
Concurrent Validation with YGTSS and PUTS

Groups	YGTSS		PUTS	
	Total Tic severity	Impairment	Total YGTSS Score	
Obsession	0.075	0.193*	0.182*	0.102
Compulsion	0.110	0.109	0.135	0.213**
CY-BOCS Total	0.106	0.208*	0.205*	0.194*

Note: CY-BOCS, Children's Yale-Brown Obsessive-Compulsive Scale; YGTSS, Yale Global Tic Severity Scale. PUTS, Premonitory Urge for Tics Scale.

3.5 Confirmatory factor analysis of CY-BOCS

We calculated the construct validity of the CY-BOCS by the confirmatory factor analysis. The comparative fit index (CFI) was 0.84 (Fig. 1).

4. Discussion

In the present study, the CY-BOCS showed good consistency in the two-factor structure. The "obsession" and the "compulsive" factors perfectly measured the OCS symptoms in Chinese children and adolescents with TD. The results suggested good reliability and validity for the CY-BOCS in patients with TD. The CFA results showed that the two factors structure of CY-BOCS was "stable" in patients with TD. Overall, CY-BOCS showed good psychometric properties in Chinses children with TD.

Some studies demonstrated fine psychometric properties of CY-BOCS in the assessment for the patients with OCD [11, 12]. For instance, the internal consistency was high and had a good interrater agreement for subscale and total OCD [33]. However, few studies investigated the psychometric properties of CY-BOCS in patients with TD. We provide the evidence for the reliability and validity of CY-BOCS, which benefits future studies for the TD with OCS.

TD and OCS are closely related and overlapped in some respects. For example, the altered cortico–striato–thalamo–cortical circuits and dysregulations of the neurotransmitter systems (mainly serotonin and dopamine) are involved in the mechanism of OCS and TD [34–37]. Moreover, the genetic correlation

between OCD and TD was higher than between OCD and ADHD [38]. Due to the close relationship between the OCS and TD, assessing OCS in patients with TD is an important issue in future studies [5].

Another aspect to consider is that the total score of Y-BOCS does not represent the severity of symptoms [39], and the total score of CY-BOCS served as an indicator for the severity of OCS may underestimate the degree [40]. For instance, if a child mainly suffers obsessions, the compulsion subscale scores could bring down the total score. Therefore, we should pay attention to both the total score of CY-BOCS and the subscale score. In this present study, we found a confirmed correlation between the obsessions/compulsion subscale and YGTSS and PUTS via the analysis of concurrent validation of CY-BOCS with YGTSS and PUTS. Therefore, we should pay close attention to the factor scores instead of merely the total score of the CY-BOCS applied in TD patients.

In this present study, the Obsessive-Compulsive Scale (OCS) severity was significantly higher in the older group than the younger group. This difference was probably due to the duration of TD in the older group being longer than the younger group. Notably, it was reported that the OCS often appeared at two years after the onset of tic symptoms [41]. Overall, age has an important influence on the severity of OCS in TD patients. Also, few studies provide evidence of the reliability and validity for the CY-BOCS in young children aged less than 8 years [9, 42]. In this study, we found that the CY-BOCS is a reliable and validated scale for assessing the symptom severity in patients with TD aged 5–8 years old. Larger sample studies are warranted to validate the CY-BOCS in the young group.

Several limitations should be clarified in future studies. First, the YGTSS and PUTS were used as the concurrent validity measures, while other scales used to assess obsession and compulsion might be more suitable. Second, the sample only includes the children sample, but not the whole age range, such as the adult sample.

Conclusion

The CY-BOCS has good psychometric properties in children and adolescents with TD in our study. Thus, we suggest that the CY-BOCS could be widely used in Chinese children and adolescents with TD, especially for the TS patients.

Abbreviations

TD: Tic Disorders; TS: Tourette syndrome; OCD: Obsessive-Compulsive Disorder; OCS: Obsessive-Compulsive Symptoms; CY-BOCS: the Children's Yale-Brown Obsessive-Compulsive Scale; YGTSS: The Yale Global Tic Severity Scale; Y-BOCS: the Yale-Brown Obsessive-Compulsive Symptom Scale; PUTS: Premonitory Urge for Tics Scale; SD: standard deviation.

Declarations

Ethics approval and consent to participate

The ethics committees approved this study of Beijing Children's Hospital of Capital Medical University.

Consent for publication

We also obtained the written informed consent from the parent or guardian of the enrolled children and adolescents.

Availability of data and materials

The datasets used and/or analyzed during the current study are available from the corresponding author on reasonable request.

Competing interests

None of the authors has any conflicts of interest to disclose.

Competing interests

All of the authors declare that they have no competing interests.

Funding

This study is supported by the National Natural Science Foundation of China(No. 82001445, Ying Li was the Founder) and the Special Fund of the Pediatric Medical Coordinated Development Center of Beijing Hospitals Authority(No. XTYB201802, Yonghua Cui was the Founder).

Authors' contributions

For this manuscript, YL(Ying Li) and YC took the initiative. Furthermore, YG, JC, YL(Yanlin Li), LY, JL, MW, FW(Fang Wen) and FW(Fang Wang) finished the data collection. YL(Ying Li) performed the data analysis. JY finished the draft. All authors have read and approved the manuscript. JC and SJ contributed equally to this article. Both YL(Ying Li) and YC were the correspondence author and they contributed equally to this article.

Acknowledgments

Thanks very much to all participants involved in this study and all authors for this article.

References

1. Robertson MM: A personal 35 year perspective on Gilles de la Tourette syndrome: prevalence, phenomenology, comorbidities, and coexistent psychopathologies. *The lancet Psychiatry* 2015, 2(1):68-87.
2. Frankel M, Cummings JL, Robertson MM, Trimble MR, Hill MA, Benson DF: Obsessions and compulsions in Gilles de la Tourette's syndrome. *Neurology* 1986, 36(3):378-382.

3. Groth C, Mol Debes N, Rask CU, Lange T, Skov L: Course of Tourette Syndrome and Comorbidities in a Large Prospective Clinical Study. *J Am Acad Child Adolesc Psychiatry* 2017, 56(4):304-312.
4. Hirschtritt ME, Lee PC, Pauls DL, Dion Y, Grados MA, Illmann C, King RA, Sandor P, McMahon WM, Lyon GJ *et al*: Lifetime prevalence, age of risk, and genetic relationships of comorbid psychiatric disorders in Tourette syndrome. *JAMA psychiatry* 2015, 72(4):325-333.
5. Rothenberger A, Roessner V: Psychopharmacotherapy of Obsessive-Compulsive Symptoms within the Framework of Tourette Syndrome. *Curr Neuropharmacol* 2019, 17(8):703-709.
6. Eddy CM, Cavanna AE, Gulisano M, Cali P, Robertson MM, Rizzo R: The effects of comorbid obsessive-compulsive disorder and attention-deficit hyperactivity disorder on quality of life in tourette syndrome. *The Journal of neuropsychiatry and clinical neurosciences* 2012, 24(4):458-462.
7. Gorman DA, Thompson N, Plessen KJ, Robertson MM, Leckman JF, Peterson BS: Psychosocial outcome and psychiatric comorbidity in older adolescents with Tourette syndrome: controlled study. *The British journal of psychiatry : the journal of mental science* 2010, 197(1):36-44.
8. Kano Y, Kono T, Matsuda N, Nonaka M, Kuwabara H, Shimada T, Shishikura K, Konno C, Ohta M: The impact of tics, obsessive-compulsive symptoms, and impulsivity on global functioning in Tourette syndrome. *Psychiatry research* 2015, 226(1):156-161.
9. Freeman J, Flessner CA, Garcia A: The Children's Yale-Brown Obsessive Compulsive Scale: reliability and validity for use among 5 to 8 year olds with obsessive-compulsive disorder. *J Abnorm Child Psychol* 2011, 39(6):877-883.
10. Goodman WK, Price LH, Rasmussen SA, Mazure C, Fleischmann RL, Hill CL, Heninger GR, Charney DS: The Yale-Brown Obsessive Compulsive Scale. I. Development, use, and reliability. *Archives of general psychiatry* 1989, 46(11):1006-1011.
11. Scahill L, Riddle MA, McSwiggin-Hardin M, Ort SI, King RA, Goodman WK, Cicchetti D, Leckman JF: Children's Yale-Brown Obsessive Compulsive Scale: reliability and validity. *J Am Acad Child Adolesc Psychiatry* 1997, 36(6):844-852.
12. Storch EA, Murphy TK, Geffken GR, Soto O, Sajid M, Allen P, Roberti JW, Killiany EM, Goodman WK: Psychometric evaluation of the Children's Yale-Brown Obsessive-Compulsive Scale. *Psychiatry research* 2004, 129(1):91-98.
13. Lewin AB, Piacentini J: Evidence-Based Assessment of Child Obsessive Compulsive Disorder: Recommendations for Clinical Practice and Treatment Research. *Child & youth care forum* 2010, 39(2):73-89.
14. Iniesta-Sepúlveda M, Rosa-Alcázar AI, Rosa-Alcázar Á, Storch EA: Evidence-based assessment in children and adolescents with obsessive–compulsive disorder. *Journal of Child and Family Studies* 2014, 23(8):1455-1470.
15. Rodrigo L, Alvarez N, Fernandez-Bustillo E, Salas-Puig J, Huerta M, Hernandez-Lahoz C: Efficacy of a Gluten-Free Diet in the Gilles de la Tourette Syndrome: A Pilot Study. *Nutrients* 2018, 10(5).
16. Jalenques I, Guiguet-Auclair C, Derost P, Joubert P, Foures L, Hartmann A, Muellner J, Rondepierre F, Syndrome de Gilles de La Tourette Study G: The MOVES (Motor tic, Obsessions and compulsions,

Vocal tic Evaluation Survey): cross-cultural evaluation of the French version and additional psychometric assessment. *Journal of neurology* 2018, 265(3):678-687.

17. Gulisano M, Cali P, Palermo F, Robertson M, Rizzo R: Premonitory Urges in Patients with Gilles de la Tourette Syndrome: An Italian Translation and a 7-Year Follow-up. *J Child Adolesc Psychopharmacol* 2015, 25(10):810-816.
18. Gong Y, Jia M, Jia F: Efficacy of escitalopram in the treatment for children and adolescents with obsessive-compulsive disorder (in Chinese). *Sichuan Mental Health* 2018, 31(3):223-225.
19. Jia D, Li Y, Li Y, Zhou J, Niu Q, Yang L: Clinical characteristics of children and adolescents with obsessive-compulsive disorder (in Chinese). *Chinese Journal of Practical Medicine* 2018, 45(3):1-4.
20. Chen X, Sun H, Miao W, An G, Chen L: Cognitive behavioral therapy improved quality of life of adolescent obsessive-compulsive disorder: a control study (in Chinese). *Chin J Behav Med ⍰ Brain Sci* 2013, 22(4):314-316.
21. Xu Y, Zhang H: The reliability and validity of the Chinese version of Yale-Brown obsessive-compulsive scale (in Chinese). *Shanghai Archives of Psychiatry* 2006, 18(6):321-323.
22. Zhang CC, Gong H, Zhang Y, Jin H, Yang Y, Li B, Li Y, Luo X, Liu W, Fang F *et al*: Development and psychometric evaluation of the Mandarin Chinese version of the Yale-Brown Obsessive-Compulsive Scale - Second Edition. *Revista brasileira de psiquiatria* 2019, 41(6):494-498.
23. Bond MH, Hwang K-K: The psychology of the Chinese people. In.: Hong Kong: Oxford University Press; 1986.
24. Tsai JL, Levenson RW, McCoy K: Cultural and temperamental variation in emotional response. *Emotion* 2006, 6(3):484.
25. Tsai JL, Knutson B, Fung HH: Cultural variation in affect valuation. *Journal of personality and social psychology* 2006, 90(2):288-307.
26. APA: American Psychiatric Association: Diagnostic and Statistical Manual of Mental Disorders, 5th edition (DSM-5). *Washington, DC,* 2013.
27. Leckman JF, Peterson BS, Pauls DL, Cohen DJ: Tic disorders. *The Psychiatric clinics of North America* 1997, 20(4):839-861.
28. Peterson BS, Pine DS, Cohen P, Brook JS: Prospective, longitudinal study of tic, obsessive-compulsive, and attention-deficit/hyperactivity disorders in an epidemiological sample. *Journal of the American Academy of Child and Adolescent Psychiatry* 2001, 40(6):685-695.
29. Muller-Vahl KR, Sambrani T, Jakubovski E: Tic disorders revisited: introduction of the term "tic spectrum disorders". *European child & adolescent psychiatry* 2019, 28(8):1129-1135.
30. Beaton DE, Bombardier C, Guillemin F, Ferraz MB: Guidelines for the process of cross-cultural adaptation of self-report measures. *Spine (Phila Pa 1976)* 2000, 25(24):3186-3191.
31. Leckman JF, Riddle MA, Hardin MT, Ort SI, Swartz KL, Stevenson J, Cohen DJ: The Yale Global Tic Severity Scale: initial testing of a clinician-rated scale of tic severity. *J Am Acad Child Adolesc Psychiatry* 1989, 28(4):566-573.

32. Storch EA, Murphy TK, Geffken GR, Sajid M, Allen P, Roberti JW, Goodman WK: Reliability and validity of the Yale Global Tic Severity Scale. *Psychol Assess* 2005, 17(4):486-491.
33. Mohsenabadi H, Zanjani Z, Assarian F: Psychometric evaluation of the Children's Yale-Brown Obsessive Compulsive Scale (CY-BOCS) in Iranian clinical and non-clinical samples. *Journal of obsessive-compulsive and related disorders* 2019, 22:100450.
34. Leckman JF, Walker DE, Goodman WK, Pauls DL, Cohen DJ: "Just right" perceptions associated with compulsive behavior in Tourette's syndrome. *The American journal of psychiatry* 1994, 151(5):675-680.
35. Eichstedt JA, Arnold SL: Childhood-onset obsessive-compulsive disorder: a tic-related subtype of OCD? *Clinical psychology review* 2001, 21(1):137-157.
36. Gomes de Alvarenga P, de Mathis MA, Dominguez Alves AC, do Rosario MC, Fossaluza V, Hounie AG, Miguel EC, Rodrigues Torres A: Clinical features of tic-related obsessive-compulsive disorder: results from a large multicenter study. *CNS spectrums* 2012, 17(2):87-93.
37. Bandelow B, Baldwin D, Abelli M, Bolea-Alamanac B, Bourin M, Chamberlain SR, Cinosi E, Davies S, Domschke K, Fineberg N *et al*: Biological markers for anxiety disorders, OCD and PTSD: A consensus statement. Part II: Neurochemistry, neurophysiology and neurocognition. *The world journal of biological psychiatry : the official journal of the World Federation of Societies of Biological Psychiatry* 2017, 18(3):162-214.
38. Yang Z, Wu H, Lee PH, Tsetsos F, Davis LK, Yu D, Lee SH, Dalsgaard S, Haavik J, Barta C: Cross-disorder GWAS meta-analysis for attention deficit/hyperactivity disorder, autism spectrum disorder, obsessive compulsive disorder, and Tourette syndrome. *bioRxiv* 2019:770222.
39. McKay D, Neziroglu F, Stevens K, Yaryura-Tobias JA: The Yale-Brown obsessive-compulsive scale: confirmatory factor analytic findings. *Journal of psychopathology and behavioral assessment* 1998, 20(3):265-274.
40. McKay D, Piacentini J, Greisberg S, Graae F, Jaffer M, Miller J, Neziroglu F, Yaryura-Tobias JA: The Children's Yale-Brown Obsessive-Compulsive Scale: item structure in an outpatient setting. *Psychological assessment* 2003, 15(4):578-581.
41. Bloch MH, Peterson BS, Scahill L, Otka J, Katsovich L, Zhang H, Leckman JF: Adulthood outcome of tic and obsessive-compulsive symptom severity in children with Tourette syndrome. *Archives of pediatrics & adolescent medicine* 2006, 160(1):65-69.
42. Cook NE, Freeman JB, Garcia AM, Sapyta JJ, Franklin ME: Assessment of obsessive compulsive disorder in young children: Psychometric properties of the Children's Yale-Brown Obsessive Compulsive Scale. *Journal of psychopathology and behavioral assessment* 2015, 37(3):432-441.

Figures

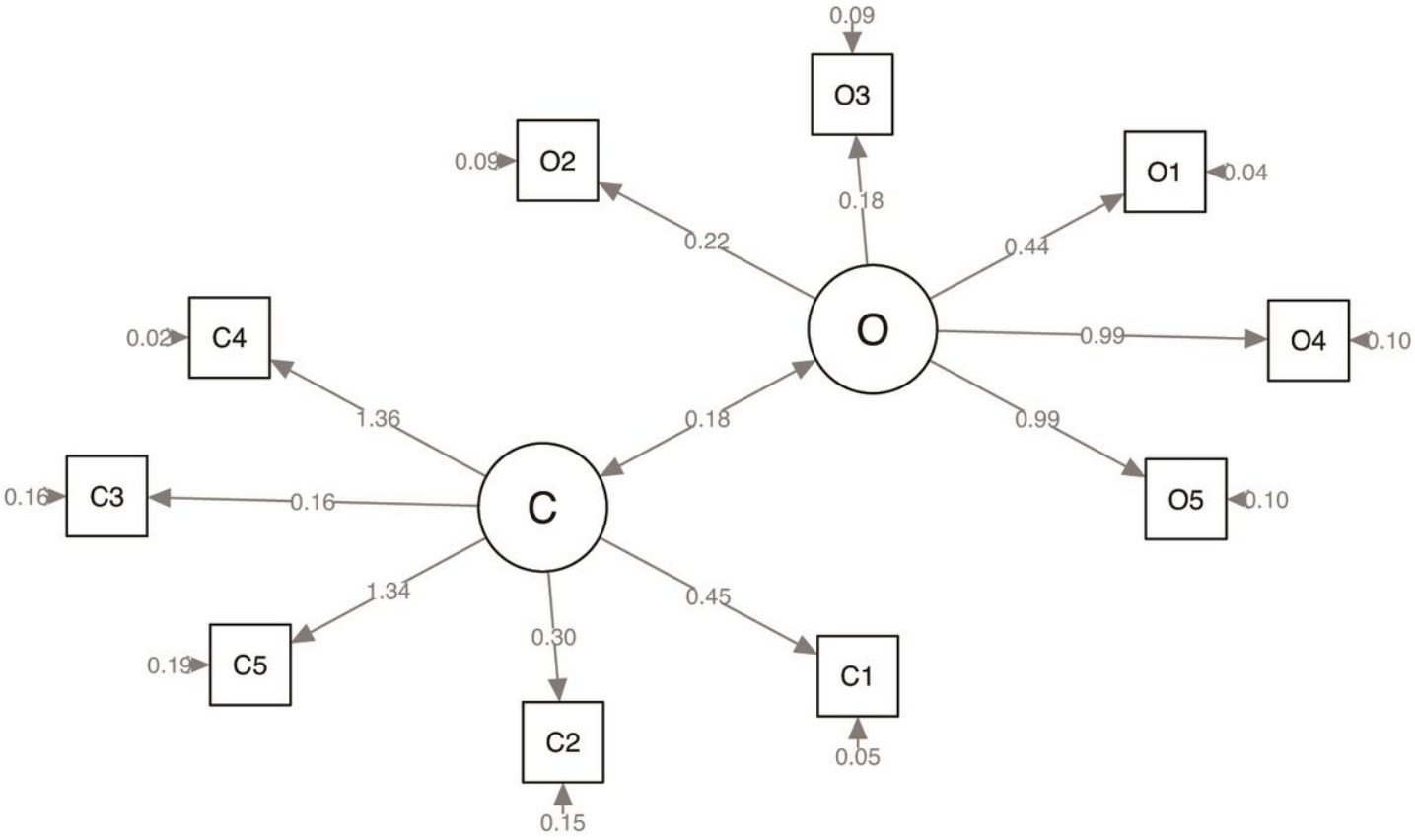

Figure 1

Confirmatory factor analysis of CY-BOCS