Research Square

Preprints are preliminary reports that have not undergone peer review.
They should not be considered conclusive, used to inform clinical practice,
or referenced by the media as validated information.

Decentralized Gravity-Fed GRP Tank Systems for Flash-Flood Harvesting in Ungauged Tributaries of the Hatta Catchment, UAE: A Conceptual Design and Feasibility Study

Reda Yousry Mohammed Allam
Mansoura University Faculty of Engineering https://orcid.org/0000-0003-1069-4133
Rafik Belarbi
rbelarbi@univ-lr.fr
University of La Rochelle https://orcid.org/0000-0003-4662-2094

Research Article

Keywords: rainwater harvesting, flash flood, ungauged catchment, managed aquifer recharge, Hatta

Posted Date: November 24th, 2026

DOI: https://doi.org/10.21203/rs.3.rs-11826614/v1

License: This work is licensed under a Creative Commons Attribution 4.0 International License.
Read Full License

Additional Declarations: The authors declare no competing interests.

Decentralized Gravity-Fed GRP Tank Systems for Flash-Flood Harvesting in Ungauged Tributaries of the Hatta Catchment, UAE: A Conceptual Design and Feasibility Study

R. Y. M. Allam[1,2], **Rafik Belarbi**[3,4,*]

[1] Structural Engineering Department, Faculty of Engineering, Mansoura University, Mansoura, Egypt (ryma@mans.edu.eg)

[2] Capital Engineering Consultancy, Dubai, United Arab Emirates

[3] Department of Architecture, Canadian University Dubai, City Walk, Dubai, P.O. Box 117781, United Arab Emirates (rafik.belarbi@cud.ac.ae)

[4] Laboratory of Engineering Sciences for the Environment (LaSIE), UMR CNRS 7356, La Rochelle University, Avenue Michel Crépeau, 17042 La Rochelle Cedex 1, France (rbelarbi@univ-lr.fr)

* Corresponding author: Rafik Belarbi, LaSIE, UMR CNRS 7356, La Rochelle University, Avenue Michel Crépeau, 17042 La Rochelle Cedex 1, France. E-mail: rbelarbi@univ-lr.fr; rafik.belarbi@cud.ac.ae

Abstract

Flash floods in the Hatta catchment (Dubai, United Arab Emirates) are short and intense, and most of their water is held by large dams downstream, while small hillslope tributaries near farms and houses remain unused. This study sizes a decentralized, electricity-free system of prefabricated glass-reinforced plastic (GRP) sectional tanks placed on rock terraces on both banks of small ungauged tributaries. The tanks fill by gravity through a screened lateral intake, spill in cascade, and drain passively within 24 h to recharge wells, ponds, households and farms. The design combines

published rainfall frequencies, the curve number (CN) method, a stochastic rainfall model and structural checks under the Dubai Building Code. The 10-year design day (80 mm, CN = 80) yields 346 m^3 of runoff per hectare, or 13 standard 4 × 4 × 2 m modules per hectare. A 5-year design (7 modules per hectare) still captures 79% of the long-term runoff and is the economic optimum. A full module applies about 21 kPa to the rock, one tenth of the 200 kPa allowable pressure; buoyancy of an empty, flooded tank (four 25 mm rock anchors) and planar sliding on joints dipping more than about 23° govern siting. A small undammed wadi in Hatta town is proposed for a pilot station.

Keywords: rainwater harvesting; flash flood; ungauged catchment; managed aquifer recharge; Hatta.

1. Introduction

The United Arab Emirates depends on groundwater and desalination, and its renewable surface water comes almost entirely from short flash floods in the Hajar Mountains. The mountains cover about 5% of the country but receive about 30% of its rainfall [1]. Mean annual rainfall in the UAE mountains is about 160–190 mm [2], and some mountain areas receive up to about 350 mm [3]; rainfall frequency in the mountain zone has been analysed by Sherif et al. [4, 5]. Rainfall is scattered and highly skewed: a few convective days per year produce most of the runoff, as the record event of 16 April 2024 (254 mm in less than 24 h at Khatm Al Shakla, Al Ain) illustrated [6].

The national response has been dams. The UAE operates more than 150 dams and water barriers [7], and the Wadi Hatta system alone includes the Hatta, Al Ghabra, Al Khattem and Suhaila dams, now the subject of a rehabilitation and construction tender reported at $80–100 million, with a total storage of up to 8 million m^3 [8, 9]. These structures are effective for flood control and recharge [10], but they are large, located on the main channels, and they hold water in open reservoirs far from many users. Small hillslope tributaries (local *shiʿab*) that join the main wadi upstream of the dams, or that run past farms and houses, are rarely exploited.

Decentralized rainwater harvesting is an old answer to this mismatch [11]. Its modern versions use prefabricated storage that can be carried by small vehicles and assembled by hand. Glass-reinforced plastic (GRP) sectional tanks are built from 1 m × 1 m moulded panels and are standardised for above-ground cold-water storage [12]. They are light, corrosion-resistant and modular, which suits rugged sites with poor access. To the authors' knowledge, no study has sized such tanks for flash-flood capture in Arabian mountain wadis, checked their foundations on ophiolite rock, or proposed a rule for distributing them along a wadi.

The design problem has three features that set it apart from roof-water harvesting. First, the tributaries are ungauged, so runoff must be estimated from regional rainfall statistics. Second, the tanks must be empty before the next storm, which may follow within a day, so emptying must be passive and complete within 24 h. Third, the tanks sit on jointed rock banks exposed to floods, so the structural risk lies in uplift and in block sliding rather than in bearing pressure.

This paper therefore aims to: (i) estimate design daily rainfall and runoff for ungauged Hatta tributaries from published data; (ii) size the number and capacity of GRP tanks on the right and left banks per unit of contributing area; (iii) select an optimal standard module that keeps tanks small; (iv) design a passive daily emptying scheme towards recharge wells, ponds, households and farms; (v) check bearing, uplift, wind, seismic and sliding actions on the rock; (vi) derive siting rules along the wadi; and (vii) compare the proposal with alternative harvesting options.

2. Study area

Hatta is Dubai's mountain exclave, about 100 km east of Dubai city, bordering Oman to the south and Ajman to the west; its administrative area is 129 km² and its population was about 12,800 in 2017 [1]. The Hatta watershed covers about 220 km² of the Hajar Mountains and is divided into ten major sub-catchments, the largest being Muzirah (40 km²), Hatta (30 km²) and Thaby uphills (19 km²) [1]. Part of

the Hatta sub-catchment lies in the Hatta Mountain Reserve, a Ramsar wetland of international importance since 2019 [1].

Geology. The catchment is carved in the Semail (Oman–UAE) ophiolite, dominated by mantle peridotite (harzburgite, variably serpentinised) and crustal gabbros [13, 14]. Fresh gabbro is strong, but serpentinised harzburgite near the surface can be weathered and closely jointed; this contrast drives the structural design in Section 3.6. Wadi floors hold Quaternary gravels with boulders, cobbles, sands and variable cementation [1].

Hydrology. Flood flows occur mainly between December and March, with isolated heavy events at the end of summer; only a small part of the flood infiltrates the wadi bed [1]. The gravel and ophiolite aquifers have an average permeability of about 5 m/d and a porosity of 10–15%, and groundwater salinity is generally below 2,000 mg/l [1]. Floods feed the reservoirs of the Hatta and Al Ghabra dams [1]. The Hatta Dam now also serves as the lower reservoir of DEWA's 250 MW pumped-storage plant, whose upper reservoir stores about 5.3 million m^3 [15].

Target sites. The system is intended for small side tributaries of the Hatta sub-catchments with contributing areas of about 0.5–5 ha, located upstream of the dam reservoirs or beside farms and houses, and outside the core of the Ramsar reserve. These tributaries are ungauged.

3. Materials and methods

3.1 System concept

Each harvesting *station* serves one tributary reach (Fig. 1). A low gabion or concrete diversion sill on the channel edge feeds a screened intake box with a coarse bar screen (25 mm) and a sediment trap. From the box, an HDPE gravity main runs to two rows of GRP sectional tanks, one on each bank, placed on rock terraces above the 100-year flood mark. In each row the tanks are linked in a fill-and-spill cascade: the first tank also acts as a settling tank, and the overflow of the last tank returns to the wadi through a protected spillway pipe. Every tank has a small screened bottom outlet that drains it

by gravity into a collector main, which delivers the water to recharge wells, freshwater ponds, household storage or farm irrigation. No pump, valve actuator or electricity is used.

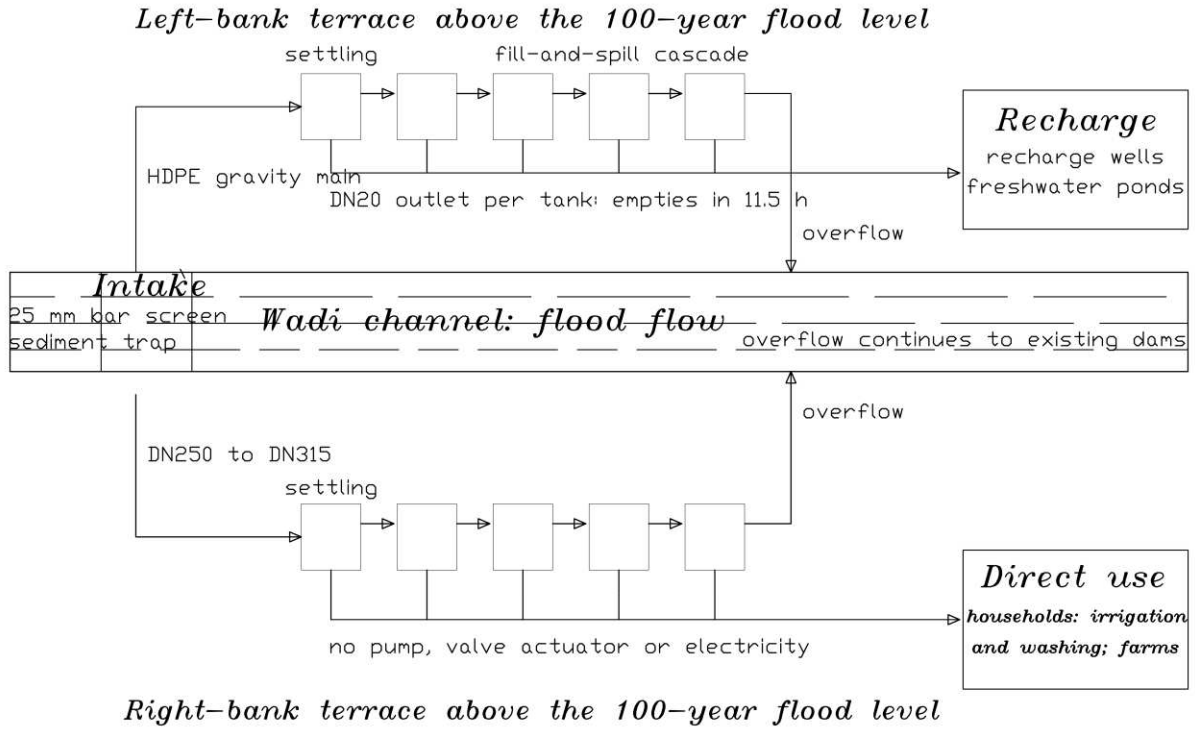

Figure 1. Schematic plan of a harvesting station. Intake, two bank rows, passive outlets, end uses.

Water moves only downhill: from the intake to the first (settling) tank of each bank row, along the cascade, and out through the bottom outlets; anything the station cannot hold returns to the wadi.

3.2 Design daily rainfall

No long rainfall record is published for the Hatta tributaries. The nearest published frequency analysis covers the northern UAE wadis Ham, Tawiyean and Bih [16], whose 24-h maximum rainfall ranges from 26–44 mm (2-year) to 135–202 mm (100-year). Because only the 2- and 100-year values are available, a Gumbel (EV1) distribution was passed through each published pair [17]:

$$P_T = u + \alpha\, y_T, \qquad y_T = -\ln\left[-\ln\left(1-\frac{1}{T}\right)\right], \qquad \alpha = \frac{P_{100}-P_2}{y_{100}-y_2} \tag{1}$$

The adopted Hatta design values (P_2 = 30, P_5 = 58, P_{10} = 80, P_{25} = 105, P_{50} = 120, P_{100} = 140 mm) follow the two lower published sets, rounded up; the upper set is kept for sensitivity (Table 1). The 10-year day was chosen as the reference design, as agreed for this study; the 2- and 5-year days are evaluated for economy.

3.3 Runoff from ungauged tributaries

Direct runoff depth Q (mm) from a daily rainfall P (mm) was estimated with the SCS curve-number method [18]:

$$Q = \frac{(P - I_a)^2}{P - I_a + S}, \qquad S = \frac{25400}{\mathrm{CN}} - 254, \qquad I_a = 0.2\,S \tag{2}$$

The target tributaries are steep, bare ophiolite slopes with thin colluvium and gravel channels. A base value CN = 80 (antecedent condition II) was adopted, with CN = 70 and 90 as bounds. CN was the most sensitive parameter in HEC-HMS models of three northern UAE wadis [10] and is also the loss parameter in a recent HEC-HMS study of Wadi Hatta [19]. Channel transmission losses, which are significant in larger wadis [20], are neglected because the intakes are placed near the head of each small reach; this makes the estimate conservative for tank sizing.

3.4 Storage sizing and module selection

The storage required at a station is the design-day runoff from its contributing area A:

$$V_d = 10\,Q_T\,A \quad (\mathrm{m}^3), \qquad N = \left\lceil \frac{V_d}{V_u} \right\rceil \tag{3}$$

with A in hectares, Q_T the runoff depth for return period T, and V_u the usable volume of one module (water depth = panel height minus 0.2 m freeboard). Seven rectangular modules built from 1 m × 1 m panels, 2 or 3 m high, were compared on usable volume, panels per m³, empty mass, full weight, footprint and base pressure. Mean panel masses of 22 kg (2 m tanks) and 28 kg (3 m tanks) and 25 kg/m² of base steel were assumed from manufacturers' data, which give 12–29 kg per 1 m × 1 m panel

depending on thickness. The standard module must stay small: height ≤ 2 m, footprint ≤ 5 m wide to fit narrow terraces, and panels light enough to be carried by two workers.

3.5 Intake hydraulics and capture efficiency

The design-day runoff was assumed to arrive as a triangular hydrograph over an effective storm duration of T_s = 3 h, typical of convective events, so that the peak inflow is $Q_p = 2V_d/T_s$. The intake main runs full at slope S = 2% (Manning n = 0.010, PE100 SDR17 internal diameters). For intake capacity $Q_i < Q_p$, the fraction of the hydrograph captured is:

$$f = 1 - \left(1 - \frac{Q_i}{Q_p}\right)^2 \quad (4)$$

3.6 Passive daily emptying and end uses

Each tank drains through a bottom orifice of area a under falling head from h_1 = 1.8 m to h_2 = 0.05 m. With tank plan area A_t and discharge coefficient C_d = 0.62, the emptying time is:

$$t = \frac{2A_t\left(\sqrt{h_1} - \sqrt{h_2}\right)}{C_d\, a\sqrt{2g}} \quad (5)$$

The orifice was sized so that a full tank empties in less than 24 h. The collector main delivers the water, in order of priority, to recharge wells, freshwater ponds, households (irrigation and washing, non-potable) and farms. The capacity of a gravity recharge well in the wadi gravels was estimated with the steady Thiem relation [21], using K = 5 m/d [1], a 10 m screen, 5 m head build-up and ln(R/r) = ln 100, then halved for clogging; the history and basis of the Thiem method are reviewed by Houben and Batelaan [22]. Recharge into the alluvial aquifer follows the principles of managed aquifer recharge [23].

3.7 Structural design on rock

The tank rests on a 0.25 m reinforced concrete plinth (C30, plan size 0.5 m larger than the tank) dowelled into cleaned rock, with the manufacturer's steel skids on top. Six checks were made for the standard module:

1. **Bearing.** Rock-mass strength was estimated with the generalised Hoek–Brown criterion [24]: $\sigma_{cm} = \sigma_{ci} \cdot s^{a}$, with $s = \exp[(GSI - 100)/9]$ and $a = 0.5 + (e^{-GSI/15} - e^{-20/3})/6$ for undisturbed rock (D = 0). The allowable bearing pressure on the rock was capped at $q_{all} = 200$ kPa, the maximum value adopted by the authors for all Hatta rock classes; under the Dubai Building Code the allowable bearing capacity must finally be recommended by the site geotechnical investigation report [25]. The Hoek–Brown rock-mass strength (with ultimate $\approx 3\sigma_{cm}$ and a factor of 3) and the Canadian Foundation Engineering Manual rule $q_a = K_{sp} \cdot q_u$ with $K_{sp} = 0.1$ [26] were used only to confirm that the rock mass is stronger than this cap. Three rock classes were used: weathered serpentinised harzburgite (UCS 25 MPa, GSI 30), moderately jointed harzburgite/serpentinite (50 MPa, GSI 40) and moderately jointed gabbro (100 MPa, GSI 50). These UCS values are assumptions bracketing typical ophiolite rocks; laboratory testing of Hatta-area gabbros is reported by Arman et al. [13].
2. **Uplift.** An extreme flood that overtops the terrace could submerge an empty tank to 1.0 m. The buoyant uplift was resisted by the empty tank and plinth with a factor of safety of 1.5, the balance being taken by four grouted rock anchors (B500, Ø25 mm, 75 mm holes). Bond length was checked with ultimate grout–rock bond stresses of 0.35, 0.70 and 1.40 MPa (assumed values bracketing weak to strong rock, to be confirmed by on-site anchor tests as required by BSI [27]) and a factor of 2, and pull-out of a 90° rock cone was checked with the submerged rock weight (26 kN/m³), ignoring rock tensile strength.
3. **Wind.** The Dubai Building Code gives reference 3-s gust speeds at 10 m on open terrain of 44 m/s for risk category I and 47 m/s for category II, and a minimum design wind pressure of 1

kN/m² [25]. The conservative 47 m/s was used with $q = 0.613V^2 = 1.35$ kPa (K_z, K_{zt} and K_d taken as 1.0) and $C_f = 1.3$, and an empty tank was checked for overturning about the plinth edge. Terraces on exposed ridges would need a topographic factor $K_{zt} > 1$.

4. **Earthquake.** The Dubai Building Code gives $S_S = 0.51$ and $S_1 = 0.18$ for site class B, with site coefficients $F_a = 0.90$ and $F_v = 0.80$ for class B (rock) [25], so $S_{DS} = (2/3)\cdot F_a \cdot S_S = 0.306$ and $S_{D1} = (2/3)\cdot F_v \cdot S_1 = 0.096$. A full tank was split into impulsive and convective water masses with Housner's model [28]. The impulsive mass, tank and plinth take S_{DS}; the convective mass takes S_{D1}/T_c with the 0.5% sloshing damping required by the Code ($\beta_1 = 0.54$) [25], and the two are combined by SRSS. As a bound, the whole mass at S_{DS} was also checked. Sliding resistance used $\mu = 0.6$. The Code values are given for Dubai, so they should be confirmed for the Hatta exclave.
5. **Panel pressure.** The hydrostatic pressure on the base panels was compared with the 2 m-tank panel rating of EN 13280 products [12].
6. **Planar sliding of the bank block.** A 5 m × 5 m × 2 m rock block carrying the full tank and plinth was checked for sliding on a daylighting joint of dip ψ (Mohr–Coulomb, $\varphi = 35°$, $c = 0$ or 20 kPa), with and without water pressure ($h_w = 1$ m, triangular distribution), and under a pseudo-static earthquake coefficient $k = S_{DS}/2.5 = 0.12$ with a required factor of 1.1 [29]:

$$\mathrm{FS} = \frac{c\,A + [(W + Q_t)\cos\psi - U]\tan\phi}{(W + Q_t)\sin\psi} \tag{6}$$

3.8 Long-term yield and optimal capacity

A design-day capacity says nothing about how often the storage is used. Long-term yield was therefore simulated over 40,000 synthetic years. The number of wet days per year follows a Poisson law (mean 12), and wet-day depths follow a Weibull law with mean 12.5 mm (annual total 150 mm). The Weibull shape ($k = 0.794$) was fitted so that the simulated 10-year annual-maximum day equals the Gumbel value (77 mm); the simulated 2-year value (41 mm) falls inside the published 26–44 mm range. Daily runoff used CN = 80. Because tanks are emptied every day, the volume captured on each

196 day is min(V_{day}, capacity). Yield, utilisation (yield/capacity) and marginal yield were computed for
197 capacities of 0–800 m³/ha. Sensitivity runs covered annual rainfall of 100, 150 and 200 mm and CN =
198 70, 80 and 90.

199 All calculations were scripted in Python (NumPy and SciPy) and are reproducible from the stated
200 inputs; the scripts are provided as Supplementary File S1.

201 # 4. Results

202 ## 4.1 Design rainfall and runoff

203 The two lower published sets give almost the same 10-year design day (76.7 mm); the upper set gives
204 114 mm (Table 1). At CN = 80 the 10-year day yields 34.6 mm of runoff, an event runoff coefficient of
205 0.43, i.e. 346 m³ per hectare of contributing area (Table 2). The 2-year day barely exceeds the initial
206 abstraction (12.7 mm) and produces only 3.7 mm.

207 **Table 1.** 24-h design rainfall (mm) from Gumbel fits through the published 2- and 100-year values of
208 Sherif et al. [16], and values adopted for Hatta.

Return period (yr)	Set A (26/140)	Set B (30/135)	Set C (44/202)	Adopted for Hatta
2	26.0	30.0	44.0	30
5	56.5	58.1	86.3	58
10	76.7	76.7	114.3	**80**
25	102.3	100.2	149.7	105
50	121.2	117.7	175.9	120
100	140.0	135.0	202.0	140

209 **Table 2.** Design-day runoff and number of standard modules (4 × 4 × 2 m, 28.8 m³ usable) per hectare
210 of contributing area.

Return period (yr)	Q, CN 70 (mm)	Q, CN 80 (mm)	Q, CN 90 (mm)	Volume, CN 80 (m^3/ha)	Modules/ ha, CN 70	Modules/ ha, CN 80	Modules/ ha, CN 90
2	0.6	3.7	11.3	37	1	2	4
5	9.0	18.9	34.0	189	4	7	12
10	20.3	34.6	53.9	346	8	**13**	19
25	36.1	54.7	77.4	547	13	19	27
50	46.6	67.4	91.7	674	17	24	32
100	61.6	84.9	111.0	849	22	30	39

4.2 Optimal module size

Base pressure is the same for all 2 m modules (about 19 kPa), and panels per m^3 fall slowly with size (Table 3). Going from 3 × 3 to 4 × 4 m cuts panels per m^3 by 14%, but going on to 5 × 5 m saves only another 10% while needing a 5 m-wide terrace. The 3 m modules use fewer panels per m^3 but raise the base pressure by about 55%, need thicker panels, and stand higher in the flood and wind. The **4 × 4 × 2 m module (28.8 m^3 usable, 64 panels, 1.8 t empty)** is therefore adopted as the standard, with the 3 × 3 × 2 m module (16.2 m^3) for narrow terraces.

Table 3. Comparison of GRP sectional modules (internal dimensions; 0.2 m freeboard).

Module L × W × H (m)	Usable volume (m^3)	Panels	Panels per m^3	Empty mass (t)	Full weight (kN)	Base pressure (kPa)	Footprint (m^2)
2 × 2 × 2	7.2	24	3.33	0.63	77	19.2	4
3 × 3 × 2	16.2	42	2.59	1.15	170	18.9	9

Module L × W × H (m)	Usable volume (m^3)	Panels	Panels per m^3	Empty mass (t)	Full weight (kN)	Base pressure (kPa)	Footprint (m^2)
4 × 4 × 2	**28.8**	**64**	**2.22**	**1.81**	**300**	**18.8**	**16**
5 × 4 × 2	36.0	76	2.11	2.17	374	18.7	20
5 × 5 × 2	45.0	90	2.00	2.60	467	18.7	25
4 × 4 × 3	44.8	80	1.79	2.64	465	29.1	16
6 × 5 × 3	84.0	126	1.50	4.28	866	28.9	30

4.3 Station sizing on the right and left banks

Table 4 converts the design volume into stations. Each bank row is limited to 8 modules (a 36 m row at 4.5 m spacing), so one station holds at most 16 modules (461 m^3). One station therefore serves up to about 1.3 ha at the 10-year design, or 2.4 ha at the 5-year design. Larger tributaries need several stations along the reach (Section 4.7).

Table 4. Station design per contributing area (CN = 80, standard module, modules split equally between banks).

Contributing area (ha)	Design (yr)	Volume (m^3)	Modules	Per bank	Row length per bank (m)	Intake main (≥ 95% capture)	Stations needed
0.5	5	94	4	2	9	DN160	1
0.5	10	173	7	4	18	DN200	1
1	5	189	7	4	18	DN200	1

Contributing area (ha)	Design (yr)	Volume (m^3)	Modules	Per bank	Row length per bank (m)	Intake main (≥ 95% capture)	Stations needed
1	10	346	13	7	32	DN250	1
2	5	378	14	7	32	DN250	1
2	10	692	25	13	59	DN315	2
5	5	945	33	17	77	DN315	3
5	10	1,730	61	31	140	DN400	4

4.4 Intake capture

Undersized intakes waste most of the storage (Table 5). For 1 ha at the 10-year design, DN250 captures the whole hydrograph; for 5 ha, DN250 captures only 43% and DN400 is needed. Since each station is limited to about 1.3–2.4 ha, DN250–DN315 mains are sufficient in practice.

Table 5. Share of the 10-year design-day hydrograph captured (%), by intake main (slope 2%, full flow).

Area (ha)	Volume (m^3)	Peak inflow (m^3/s)	DN160	DN200	DN250	DN315	DN400
1	346	0.064	60	89	100	100	100
2	692	0.128	34	56	85	100	100
5	1,730	0.320	14	25	43	70	98
10	3,460	0.641	7	13	23	40	67

Area (ha)	Volume (m³)	Peak inflow (m³/s)	DN160	DN200	DN250	DN315	DN400
20	6,920	1.281	4	7	12	21	38

Full-flow capacities are 0.024, 0.043, 0.078, 0.145 and 0.274 m³/s for DN160 to DN400.

4.5 Passive daily emptying

To empty a full standard module in 12, 18, 20 or 24 h, the bottom orifice must be 19.6, 16.0, 15.2 or 13.9 mm in diameter. A DN20 outlet with a stainless mesh screen was adopted. It empties a full tank in 11.5 h with a peak outflow of 1.16 l/s, which leaves a margin for partial clogging within the 24 h target. A 16-module station therefore releases up to 461 m³ per day. One gravity recharge well in the wadi gravels takes about 340 m³/d (170 m³/d allowing for clogging). A full station thus needs two to three recharge wells, or one well plus a pond or farm connection.

4.6 Structural behaviour on rock

The full module and plinth transmit 20.8 kPa to the rock, about one tenth of the 200 kPa allowable pressure adopted for the rock (factor of safety 9.6). Under the code earthquake the edge pressure rises to 24.3 kPa (factor 8.2). Even the 3 m-high modules stay below about 31 kPa, and the steel skids press only 150 kPa on the plinth, so the skids would be acceptable even directly on rock. The Hoek–Brown estimates confirm that every rock class is stronger than the adopted cap (Table 6).

Table 6. Bearing check of the standard module (q = 20.8 kPa) against the adopted allowable pressure of 200 kPa, with the Hoek–Brown (D = 0) and CFEM estimates shown only as a check that the rock exceeds the cap.

Rock class	UCS (MPa)	GSI	σ_{cm} (MPa)	Hoek–Brown estimate (kPa)	CFEM estimate (kPa)	Adopted q_{all} (kPa)	Factor of safety, static	Factor of safety, earthquake
Weathered serpentinised harzburgite	25	30	0.43	430	2,500	**200**	9.6	8.2
Moderately jointed harzburgite/serpentinite	50	40	1.65	1,654	5,000	**200**	9.6	8.2
Moderately jointed gabbro	100	50	6.02	6,023	10,000	**200**	9.6	8.2

The governing actions are uplift and sliding (Table 7). An empty module submerged to 1.0 m receives 157 kN of uplift against 139 kN of dead weight (tank and plinth). The 1.5 safety factor leaves 96 kN, i.e. 24 kN per anchor, far below the 213 kN capacity of a Ø25 B500 bar. Bond needs only 0.15–0.58 m, but the 90° rock cone governs: 1.0 m of embedment gives a factor of 0.71 and fails, 1.5 m gives 2.38 and is adopted.

Table 7. Other structural checks for the standard module.

Check	Action	Resistance	Factor of safety	Result
Uplift, empty tank submerged 1.0 m	157 kN	139 kN dead load + 4	1.5 (by design)	24 kN per anchor

Check	Action	Resistance	Factor of safety	Result
		anchors		
Anchor bar Ø25 B500	24 kN	213 kN	8.9	OK
Anchor bond, weak rock (0.35 MPa)	24 kN	needs 0.58 m	2.0	OK with 1.5 m
Rock cone, 1.0 m embedment	24 kN	17 kN	0.71	Not OK
Rock cone, 1.5 m embedment	24 kN	57 kN	2.38	**Adopted**
Wind 47 m/s (DBC category II), empty tank overturning	17.6 kN·m	313 kN·m	17.8	OK
Earthquake (DBC, S_{DS} = 0.306), full tank overturning, impulsive + convective	53.1 kN·m	948 kN·m	17.9	OK
Earthquake, full tank sliding, impulsive + convective	86.4 kN	μ = 0.6	2.9	OK
Earthquake, full tank sliding, whole mass at S_{DS} (bound)	129 kN	μ = 0.6	1.96	OK; anchors add shear resistance
Base panel hydrostatic pressure	17.7 kPa	2 m-tank panel rating	—	Within standard range

The first sloshing period of the 4 m module with 1.8 m of water is 2.4 s. With 0.5% damping the convective acceleration is 0.074 g, and the sloshing wave height ($0.42 \cdot L \cdot S_{ac}$) is about 0.12 m, within the 0.2 m freeboard.

Planar sliding of the supporting block is the true site-selection criterion (Table 8). With a clean joint (c = 0) and water pressure, the factor of safety falls below 1.5 when the joint dips more than 23.3° out of the slope. With 20 kPa of cohesion the limit rises to 33.4°. Under the code earthquake (k = 0.12, required factor 1.1) the limits are almost the same: 23.3° for clean joints and 36.1° for cohesive joints, so the 23° siting rule covers both cases.

Table 8. Factor of safety against planar sliding of a 5 × 5 × 2 m bank block carrying a full module (φ = 35°).

Joint dip ψ (°)	c = 0, dry	c = 0, h_w = 1 m	c = 20 kPa, h_w = 1 m	c = 0, h_w = 1 m, earthquake k = 0.12	c = 20 kPa, h_w = 1 m, earthquake k = 0.12
15	2.61	2.42	3.54	1.60	2.37
20	1.92	1.78	2.63	1.27	1.90
25	1.50	1.38	2.07	1.03	1.57
30	1.21	1.11	1.69	0.85	1.33
35	1.00	0.91	1.42	0.70	1.14

4.7 Long-term yield and optimal capacity

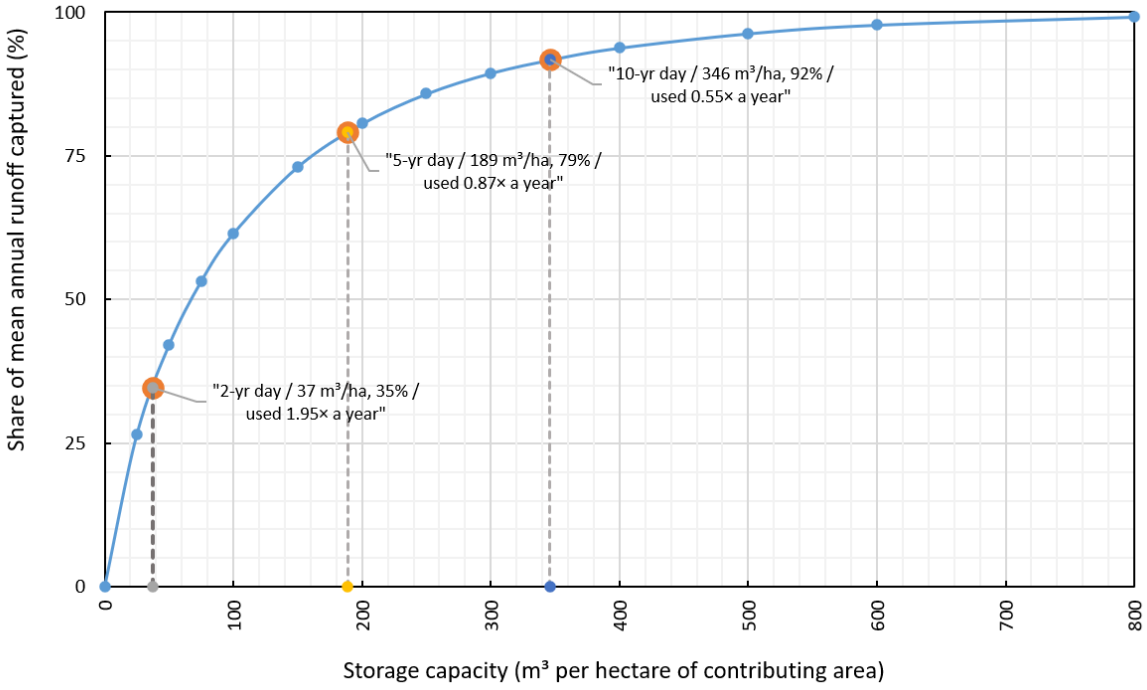

Figure 2. Long-term capture vs storage capacity. Stochastic simulation, 40,000 synthetic years.

With 150 mm of annual rainfall and CN = 80, a hillslope hectare produces on average 208 m³ of runoff per year on about 3.9 runoff days (annual runoff coefficient 0.14). The 10-year capacity (346 m³/ha) captures 92% of it, but each cubic metre of storage is used only 0.55 times per year. The 5-year capacity (189 m³/ha) still captures 79%, and its storage is used 0.87 times per year. The marginal yield of extra storage drops below 0.5 m³ per m³ of capacity per year at about 150 m³/ha, and below 0.2 at 250 m³/ha. The economic optimum therefore lies at 150–200 m³/ha, close to the 5-year design (6–7 modules/ha); the 10-year design is the upper technical limit.

Table 9. Sensitivity of runoff, capture and modules per hectare to annual rainfall and curve number.

Annual rainfall (mm)	CN	Mean runoff (m³/ha/yr)	10-yr capacity (m³/ha)	Captured at 10-yr capacity (%)	Modules/ha, 10-yr
100	70	25	71	73	3
100	80	75	159	87	6

Annual rainfall (mm)	CN	Mean runoff (m³/ha/yr)	10-yr capacity (m³/ha)	Captured at 10-yr capacity (%)	Modules/ha, 10-yr
100	90	222	300	94	11
150	70	89	203	85	8
150	80	208	346	92	13
150	90	480	539	96	19
200	70	194	372	89	13
200	80	392	561	94	20
200	90	789	790	97	28

The number of modules per hectare varies by a factor of about 9 across the plausible range, so CN and design rainfall are the parameters that most need local data.

4.8 Distribution along the wadi

The results translate into seven siting rules for the right and left banks of any Hatta tributary:

1. Map the tributary from a DEM and divide it into reaches whose incremental contributing area does not exceed the station limit (about 1.3 ha at the 10-year design, 2.4 ha at the 5-year design).
2. Place one station at the downstream end of each reach, preferably just below a side-ravine confluence, where the incremental flow is collected.
3. Put tanks only on terraces above the 100-year flood mark and at least 3 m back from the active channel edge. This is a practical minimum set by the authors to keep plinths and anchors out of the zone of bank undercutting and to leave a maintenance path; it should be increased where cross-section surveys or flood mapping show lateral erosion.

4. Map joints on each terrace and reject blocks with daylighting joints dipping more than 23° out of the slope (clean joints) or 33° (cohesive joints), unless they are bolted.
5. Split modules equally between the banks; if only one bank passes rule 4, use a single row of up to 8 modules and add a station upstream.
6. Keep the station within gravity reach of its users: the collector outfall must lie below the tank base, with recharge wells, ponds or farms downslope.
7. Leave the main channels and the Ramsar core untouched, and let all overflow continue to the existing dams.

4.9 Proposed pilot tributary

A small wadi in Hatta town is proposed as the first pilot. It lies inside Hatta town, on the right (south-east) side of Wadi Hatta between Hatta Dam and Al Khattem Dam (Fig. 3), and no dam is recorded on it in the national dam layer [30]. Table 10 compares it with the other named tributaries.

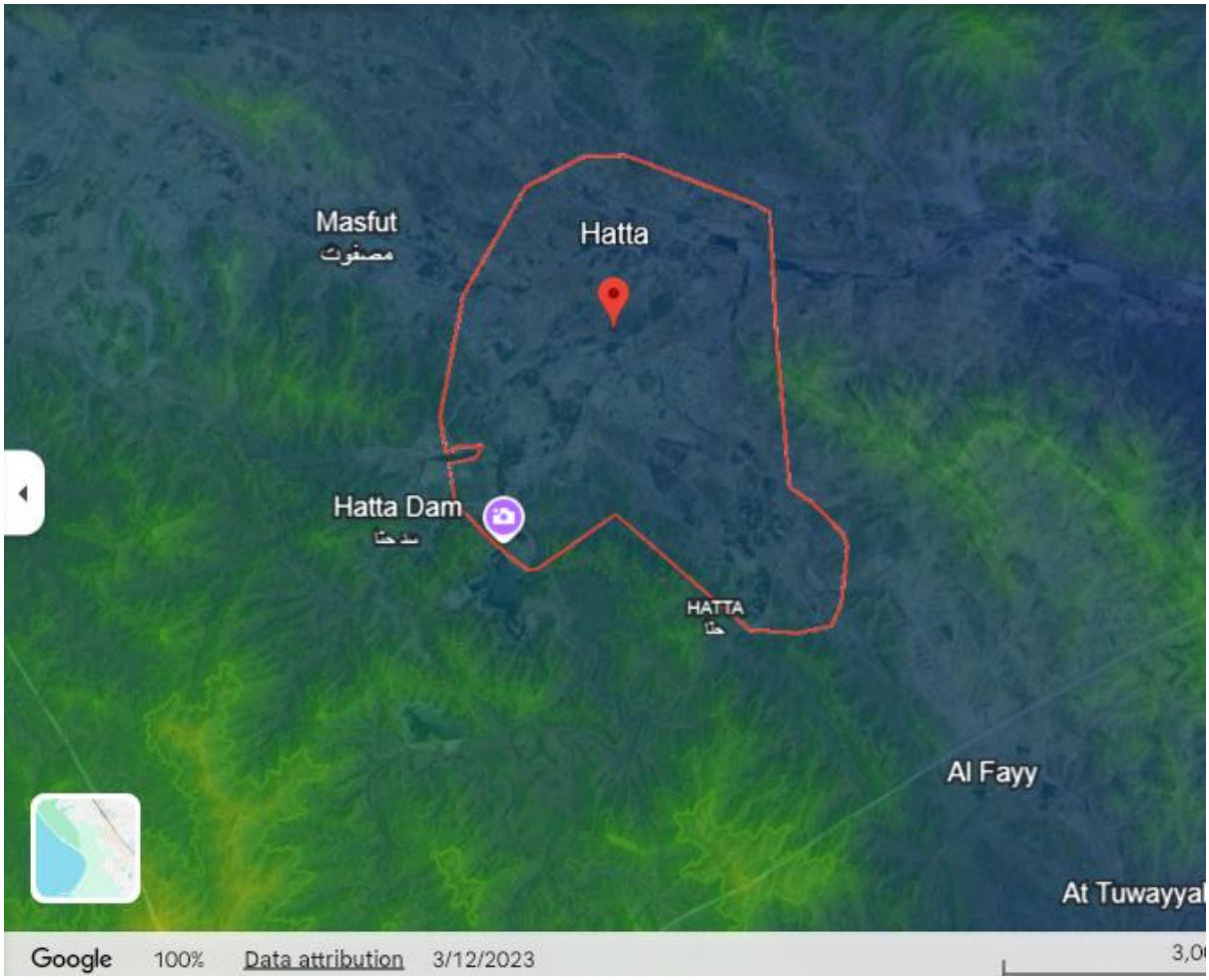

Figure 3. Hatta area in Google Earth (imagery dated 3 December 2023); the red outline is the Hatta locality boundary shown by Google Earth, with Hatta Dam at its south-west edge. The proposed pilot wadi lies inside Hatta town, between Hatta Dam and Al Khattem Dam. Imagery © Google Earth [31].

The pilot wadi joins the reach of Wadi Hatta between the two dams. Its confluence has not yet been surveyed, so the hydrological outlet of the study catchment must be fixed on the FGIC stream layer [30] and checked in the field.

Google Maps cross-check. The site was also checked on Google Maps [31]. The Google Maps pins for Hatta Dam (24.7847° N, 56.1134° E) and Al Khattem Dam (24.8141° N, 56.1426° E) were used to locate the dams; visitor pins can be offset from the structures by up to about 200 m, which does not affect a site-selection study at this scale. Google Maps also lists a "Hatta Hidden Lake Dam" at 24.7877° N, 56.1462° E, in the upstream direction of a right-bank tributary. This structure is not in the FGIC dam

layer [30]. If it lies on the pilot wadi, the scheme must be placed downstream of it, or on side ravines that join below it, so that the tanks do not take water the small dam already holds. This is the first item for the field visit.

Table 10. Screening of Hatta-area tributaries for the pilot (sources given in the table).

Tributary	Territory	Dams recorded on it	Position	Verdict
Proposed pilot wadi	Dubai (Hatta)	None in the national dam layer [30]; a small "Hidden Lake Dam" listed on Google Maps to be checked [31]	Inside Hatta town, right (south-east) side of Wadi Hatta between Hatta Dam and Al Khattem Dam (Fig. 3)	**Selected**
Side wadis in Masfut	Ajman (Masfut enclave)	Dammed, e.g. Al Khileban Dam [31]	West of Hatta town, outside Dubai	Rejected: already dammed, outside Dubai
Wadi Al Amed	Dubai (Hatta)	Al Ghabra reservoir [1]	Within the Hatta sub-catchment [1]	Rejected: already feeds Al Ghabra reservoir
Tributaries in Oman	Oman	—	Upstream parts of the basin outside the UAE	Outside the study area

Four reasons support the choice. First, the tributary is undammed, so tanks add storage where none exists, and their overflow still reaches Al Khattem Dam. Second, it is close to users: Hatta's heritage farms are irrigated by *aflaj*, and DEWA has had to pump water to the aflaj of the Al Shareea, Al Hail, Jeemah, Leem and Suhaila farms [32]. Third, it lies entirely in Dubai, which simplifies permits.

Fourth, Hatta town lies about 2 km north of the Hatta Mountain Reserve [1], so the lower reach of the pilot wadi is likely outside the Ramsar site; the boundary must still be checked.

The catchment area, length and slope of the pilot wadi are not published, so no final tank count can be given yet. The pilot therefore proceeds in five steps:

1. Delineate the pilot wadi catchment and its side ravines from a DEM (Copernicus 30 m as a minimum; a Dubai Municipality survey is preferable).
2. Choose one side ravine of 0.5–1 ha that drains to a reach with rock terraces on both banks above the flood mark.
3. Build a 4-module pilot station (2 modules per bank). For a 0.5 ha ravine at the 5-year design this gives 94 m^3 with a DN160 intake (Table 4), discharging to one recharge well.
4. Instrument the station with a tipping-bucket rain gauge, a stage sensor at the intake and level loggers in the tanks. These run on batteries or a small solar panel; the harvesting system itself needs no power.
5. After two wet seasons (December–March), calibrate CN and the design rainfall, then size the full pilot scheme with Tables 2–5.

Before construction, the site needs a joint survey of each terrace (rule 4), rock samples for UCS testing, a survey of flood marks, and permits from Dubai Municipality, which is running the Hatta dams project [9].

Catchment delineation. Step 1 follows the standard DEM workflow. Elevation and contour data are taken from the national services of the Federal Geographic Information Center through the UAE geoportal [30], with Copernicus 30 m as a fallback, and the station reaches are surveyed in detail. The DEM is then processed in eight steps:

1. Fill sinks in the DEM.
2. Compute D8 flow direction and flow accumulation [33].
3. Extract the stream network with an accumulation threshold and assign Strahler orders.

4. Place outlets at the confluence with Wadi Hatta and at each candidate station.
5. Delineate the catchment and sub-catchments, and compute area, flow length and mean slope.
6. Compute the time of concentration and the design peak discharge of each sub-catchment.
7. Survey cross-sections at each station to fix the 100-year flood level and check channel capacity (rule 3).
8. Apply Tables 2–5 to each sub-catchment to obtain the number of modules on each bank.

The outputs are the DEM (GeoTIFF), catchment and stream layers (GIS), cross-sections (CAD), a hydrological workbook, and the station layout drawings. A 30 m DEM is adequate for the catchment boundaries, but the flood levels and terrace positions need surveyed data.

CN calibration. For each runoff event, the observed runoff volume is the sum of the rise in water level in every tank times its plan area (16 m²), plus the overflow volume from the last tank. The overflow is computed from its level above the 1.80 m crest with the weir equation $Q = 1.7 \cdot b \cdot h^{1.5}$ ($b = 1.0$ m). Dividing by the contributing area gives the event runoff depth Q (mm). Events in which the intake stage shows that its capacity was exceeded are corrected with the sill rating or excluded. The event retention S and curve number then follow from the inverted SCS equation:

$$S = 5\left[P + 2Q - \sqrt{4Q^2 + 5PQ}\right], \qquad \mathrm{CN} = \frac{25400}{254+S} \tag{7}$$

Rainfall and runoff are then ranked separately and paired by rank (frequency matching), and the asymptotic curve number is fitted with the method of Hawkins [34]. The fit is judged by the root-mean-square error and the Nash–Sutcliffe efficiency of event runoff volumes.

Logger settings (recommended). Use a tipping-bucket rain gauge with 0.2 mm resolution and pressure level loggers (0–3 m range, ±0.1% of full scale) in the intake and in each tank. Log every minute during rain, triggered by the gauge, and every 15 minutes otherwise. Power comes from batteries with a small (about 10 W) solar panel; telemetry is optional.

Indicative scheme size. Until the catchment is delineated, the full pilot scheme is sized by the side-ravine area it harvests, not by the whole catchment. The Ramsar information sheet divides the 220 km² Hatta watershed into ten major sub-catchments, the largest being 40 km² [1], so the pilot wadi is a small sub-catchment of a few square kilometres at most. At the recommended 5-year design (7 modules per hectare, at most 16 modules per station), harvesting 5 ha of side ravines needs 35 modules in 3 stations (1,008 m³). Harvesting 10 ha needs 70 modules in 5 stations (2,016 m³), and 20 ha needs 140 modules in 9 stations (4,032 m³). With the storage used 0.87 times a year (Section 4.7), these deliver about 880, 1,750 and 3,500 m³ of water a year. Stations are placed on the right and left banks of each ravine following the siting rules of Section 4.8, starting from the lowest reach above the town and working upstream. The final count follows from steps 1–5 above.

4.10 Construction and connection details

Figures 4–6 and Table 11 give the construction details of the standard module, of the intake at the wadi, and of the inlet, transfer, outlet and overflow connections. Every size follows from the design flows above. A full station (16 modules, 461 m³) receives a 10-year peak inflow of 0.085 m³/s, or 0.043 m³/s per bank. The gravity main is therefore DN315 (0.145 m³/s at 2%), split into two DN250 bank branches (0.078 m³/s each).

Filling by gravity needs enough fall between the intake and the tanks. With the inlet at 1.70 m above the tank floor, entry and exit losses of 0.4 m (K = 1.5 at 2.2 m/s in DN250) and a 2% pipe slope over a main of length L, the intake invert must satisfy:

$$z_{\text{intake}} \geq z_{\text{floor}} + 2.1 + 0.02\,L \quad \text{(m)} \tag{8}$$

For a 100 m main the intake must therefore lie at least 4.1 m above the tank floor. This rule fixes how far upstream of each station the intake is placed.

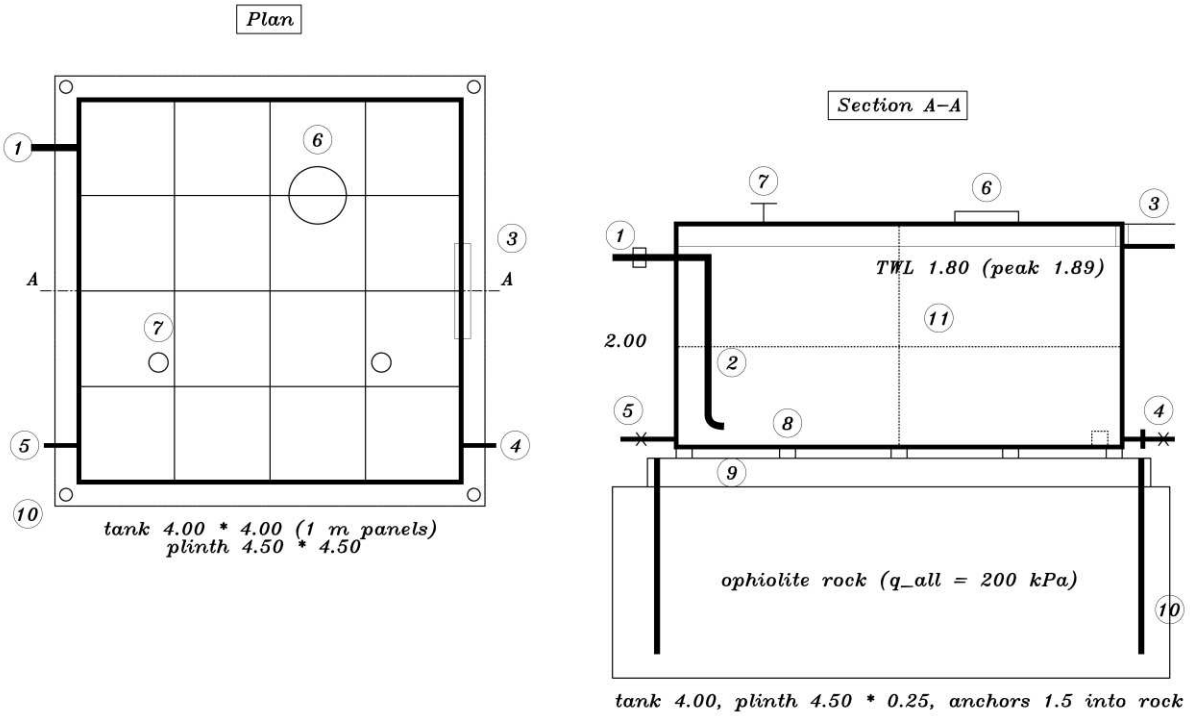

392

393 **Figure 4.** Standard 4 × 4 × 2 m module. Plan and composite section, components numbered as in Table

394 11.

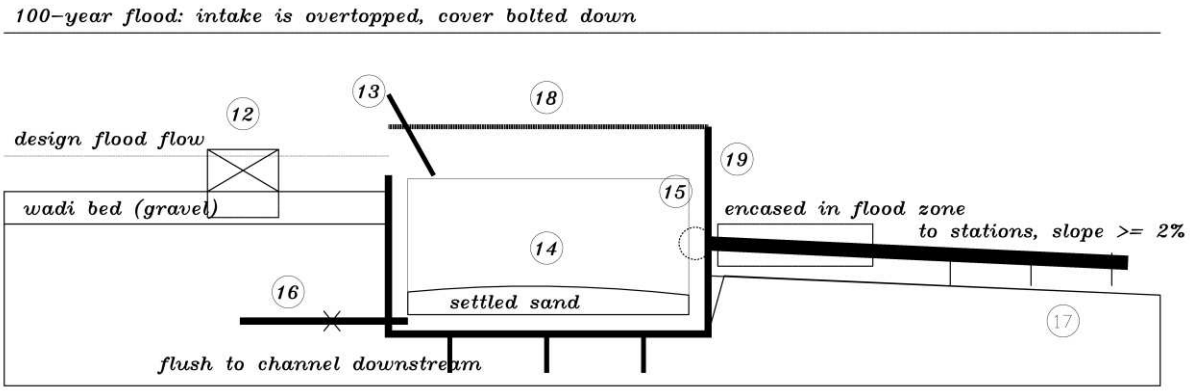

395

396 **Figure 5.** Intake structure at the wadi. Schematic section, components numbered as in Table 11.

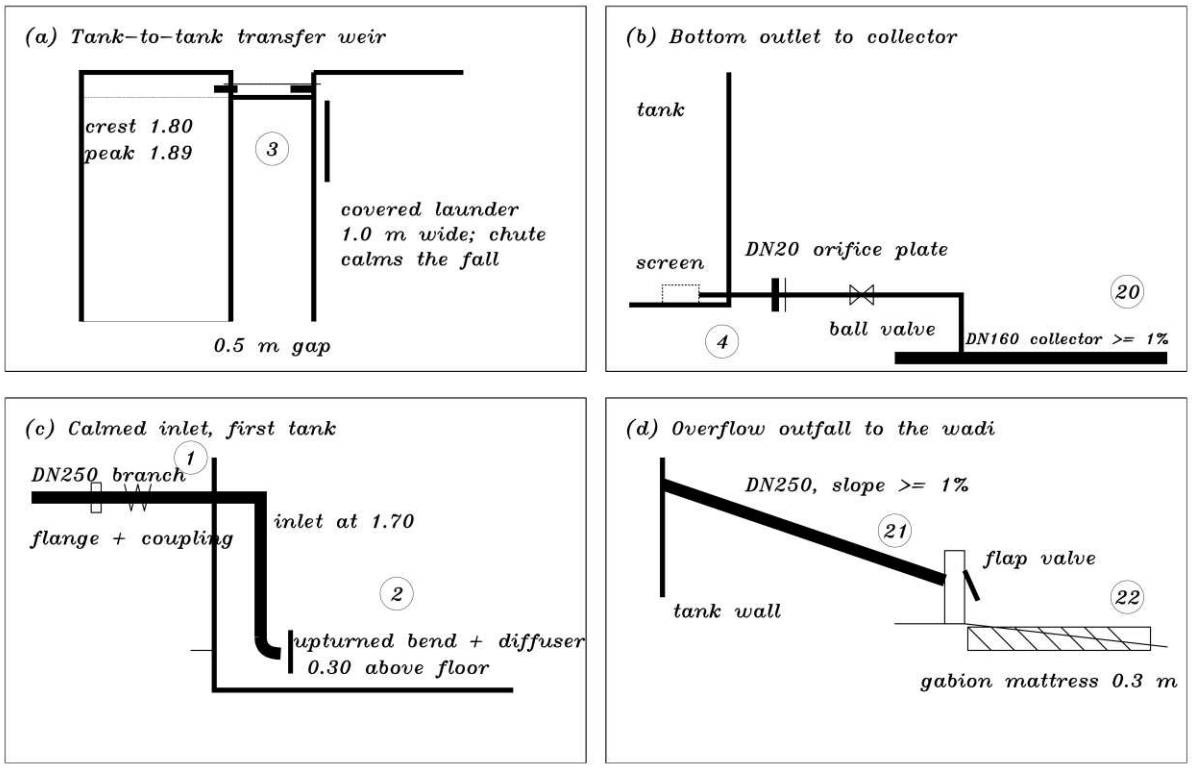

397

398 **Figure 6.** Connection details. (a) transfer weir, (b) bottom outlet, (c) calmed inlet, (d) overflow outfall.

399 **Table 11.** Schedule of components (numbers as in Figs. 4–6).

No.	Component	Specification	Basis
1	Inlet nozzle (first tank of each row)	Flanged GRP DN250 at 1.70 m; EPDM flexible coupling and HDPE flange adaptor outside	Bank flow 0.043 m³/s
2	Calmed inlet	Internal DN250 drop pipe to 0.30 m above the floor, upturned bend with diffuser plate	Avoids stirring settled sediment
3	Transfer weir	1.0 m-wide framed slot in the top wall panel, crest 1.80 m; covered GRP launder 1.0 m wide across the 0.5 m gap, rubber skirts at both tanks	Weir head 0.09 m at 0.043 m³/s, peak level 1.89 m
4	Bottom	DN50 nozzle 50 mm above floor; 2 mm stainless	Empties in 11.5 h; 1.16

No.	Component	Specification	Basis
	outlet	mesh screen; DN20 stainless orifice plate between flanges; DN50 lockable ball valve, normally open; DN63 drop to collector	l/s peak
5	Washout	DN80 valve at floor level, normally closed, discharging to the wadi	Flushes sediment; 0.8 m^3 dead storage below outlet
6	Manhole	600 mm lockable roof hatch	Inspection and cleaning
7	Vents	2 × DN100 mushroom vents with insect mesh	Air velocity about 2.7 m/s at peak inflow
8	Skids	Five hot-dip galvanised steel beams at 1.0 m centres, bolted to the plinth	Contact pressure 150 kPa < 200 kPa
9	Plinth	C30 reinforced concrete, 4.50 × 4.50 × 0.25 m, T12 at 200 mm top and bottom, T16 dowels 0.3 m into rock at 1.0 m	Load spread; dead weight against uplift
10	Rock anchors	4 × Ø25 B500, epoxy-coated or galvanised, 1.5 m into rock in 75 mm grouted holes at the plinth corners, plated to the skid frame	24 kN each; rock-cone factor 2.38
11	Internal ties	Stainless steel tie rods to the manufacturer's design	Panel stability [12]
12	Diversion sill	Gabion or mass concrete, 0.3–0.5 m high, keyed 0.3 m into rock, overtopped by floods	Guides low and medium flows to the intake
13	Trash rack	Stainless bars, 25 mm clear spacing, gross area ≥ 0.20	Net velocity ≤ 0.6 m/s

No.	Component	Specification	Basis
		m², inclined 60°	
14	Sediment trap	Reinforced concrete chamber, 3.0 × 1.5 m in plan, 1.0 m deep	≥ 4.1 m² settles 0.2 mm sand (0.021 m/s); 0.06 m/s through-flow
15	Outlet bellmouth	DN315 bellmouth with 6 mm stainless screen, invert 0.4 m above trap floor	Keeps settled sand out of the main
16	Flushing outlet	DN150 pipe with gate valve, discharging to the channel downstream	Empties the trap after each event
17	Gravity main	HDPE PE100 SDR17 DN315, butt-fused, slope ≥ 2%, stainless clamps to rock every 3 m, concrete-encased in the flood zone, air valve at high points; tee to two DN250 branches with gate valves	0.145 m³/s capacity
18	Trap cover	Removable GRP grating, bolted down	Safety; overtopped by floods
19	Intake walls	Reinforced concrete C35, sulphate-resisting cement, 0.25 m thick, dowelled to rock	Durability in the wadi
20	Collector	HDPE DN160 per bank at ≥ 1%, to recharge well, pond or farm	16.8 l/s capacity vs 9.3 l/s needed
21	Overflow pipe	DN250 from the last tank at ≥ 1%, flap valve at the headwall	0.055 m³/s at 1% > 0.043 m³/s
22	Outfall apron	Gabion mattress 2 × 3 m, 0.3 m thick, or rock riprap with D50 ≈ 0.4 m	Isbash sizing for an assumed 3 m/s flood

No.	Component	Specification	Basis
			velocity

5. Alternatives and comparison

The GRP proposal was screened against six alternatives that could serve the same small tributaries (Table 12). The ratings are the authors' qualitative judgement from the analysis above and the general harvesting literature [11, 23]; they are not costed and should be revisited once local prices are known.

Table 12. Qualitative screening of harvesting options for ungauged Hatta tributaries (●●● favourable, ● unfavourable).

Option	Description	Daily-reset storage	Evaporation loss	Flood exposure	Works on rock without heavy plant	Water reaches users by gravity	Main drawback
A. GRP sectional tanks on banks (proposed)	Modular above-ground tanks, cascade, passive outlets	●●●	●●● (covered)	●● (terraces, anchored)	●●●	●●●	Many modules per hectare; UV ageing; visual impact
B. Gabion check dams /	Small porous weirs	●	●	● (in channel)	●●	●	Silting; little usable storage

Option	Description	Daily-reset storage	Evaporation loss	Flood exposure	Works on rock without heavy plant	Water reaches users by gravity	Main drawback
recharge weirs	across the channel						
C. Direct recharge wells with sediment trap	Intake feeds wells directly, no storage	●● (no storage needed)	●●●	●●	●●	● (recharge only)	Well capacity (~170–340 m^3/d) limits capture; clogging
D. Subsurface / sand dam	Cut-off wall in wadi gravels	●	●●●	●●● (buried)	● (trenching to rock)	●	Needs deep gravel; excavation
E. Concrete or masonry cistern (*birka*)	Cast-in-place open or covered tank	●●	●●	●●	● (formwork, concrete supply)	●●	Heavy, slow to build, cracks on jointed rock
F. HDPE	Flexible	●●●	●●●	●	●●●	●●	Puncture

Option	Description	Daily-reset storage	Evaporation loss	Flood exposure	Works on rock without heavy plant	Water reaches users by gravity	Main drawback
pillow / bladder tanks	tanks on levelled pads			(punctures, flotation)			by debris; short life
G. Buried one-piece GRP cylinders	Factory tanks in rock trenches	●●●	●●●	●●●	● (rock excavation)	● (outfall below grade)	Costly excavation; buoyancy when empty

Two hybrids look most promising. **A + C** keeps the GRP cascade small (5-year capacity) and sends the daily release to recharge wells, so the storage only buffers the storm peak against the well intake rate. **A + B** adds small gabion sills below each station to slow the overflow and spread it over the wadi bed, increasing natural recharge before the flow reaches the dams.

5.1 Sustainable lightweight tank materials

No light tank material is best on every count. For Hatta the GRP sectional tank remains the best structural fit, but its footprint can be reduced, and one-piece recycled-content polyethylene is a lower-impact option for small stations (Table 13).

Table 13. Lightweight tank materials for the Hatta stations, from the sources cited.

Material	Form and size	Handling on mountain sites	Life-cycle evidence	End of life	Fit for Hatta tributaries
GRP sectional panels (proposed)	1 m × 1 m panels, tanks up to 4 m high [12]	Panels of 12–29 kg carried by hand; any tank size	Fibreglass tank dominated 9 of 11 impact categories against polyethylene in one RWH life-cycle assessment [35]	About 2% of GRP is recycled; routes are grinding or cement-kiln co-processing [36], where resin gives energy and glass and filler become clinker feedstock [37]	**Best structural fit**; improve resin and end of life
Rotomoulded polyethylene, one piece	50–30,000 litres per tank [38]	Light, but each tank travels whole	HDPE tanks had lower impacts than LDPE, steel and ferrocement in most categories [39]; polyethylene led energy demand and fossil depletion against fibreglass [35]	Thermoplastic; can be reground and remoulded	Good for small stations (≤ 30 m^3 per tank); needs high UV stabilisation and shade

Material	Form and size	Handling on mountain sites	Life-cycle evidence	End of life	Fit for Hatta tributaries
Ferrocement, built on site	Mortar on mesh, cast in place	Heavy; needs cement and water on site	Higher impacts than HDPE in most categories [39]; site-built tanks were always cheaper than prefabricated ones in East Africa [40]	Inert rubble	Farms with road access; not steep terraces
Reinforced concrete	Cast or precast	Heaviest; needs plant	Storage tanks are a large share of the embodied carbon of rainwater systems [41]	Inert rubble	Not suitable

Five measures make the proposed GRP stations more sustainable:

1. **Bio-based resin.** Specify panels moulded with partly bio-based unsaturated polyester resin; resins with about 20–23% bio-based content are already in commercial use [42].
2. **Design for reuse.** Bolted panels can be dismantled and moved to another station, extending their service life before any recycling.
3. **Planned end of life.** Agree cement-kiln co-processing or a manufacturer take-back scheme at procurement [36, 37].
4. **Sun protection.** Use light-coloured, UV-stable gelcoat and shade where possible to limit ageing and water heating.

5. **Judge by water delivered.** Embodied impact per m³ of water falls as storage use rises: a 5-year capacity used 0.87 times a year carries about 37% less embodied impact per m³ than a 10-year capacity used 0.55 times (Fig. 2). Right-sizing is therefore itself a sustainability measure.

5.2 Economic, social and environmental impacts

The impacts were assessed for the indicative 10 ha pilot-wadi scheme of Section 4.9 (70 modules in 5 stations, 2,016 m³ of storage). Used 0.87 times a year (Section 4.7), it delivers about 1,750 m³ of water a year, or 164 m³ per harvested hectare. Table 14 lists the indicators. Each is modest on its own; the case for the system rests on several benefits arriving together at the same place, where water is scarce and floods do damage.

Table 14. Economic, social and environmental indicators for the indicative 10 ha pilot-wadi scheme.

Dimension	Mechanism	Indicator for the 10 ha scheme	Basis
Economic: value of water	Harvested water replaces desalinated or trucked water	AED 2,600–4,600 a year at a production cost of USD 0.4–0.7 per m³; up to about AED 15,400 a year at the residential tariff of AED 7.70–8.80 per m³	[43, 44]
Economic: avoided energy	No desalination and no pumping	About 6,300 kWh a year at 3.6 kWh per m³ of desalinated water	[45]
Economic: flood losses	Runoff held on the slopes above roads, farms and houses	Not quantified at this scale; UAE insured losses from the April 2024 floods were USD 2.9–3.4 billion	[46]
Social: water access	Water delivered by gravity close to	About 1,750 m³ a year for heritage farms, household gardens, ponds and	This study; [32]

Dimension	Mechanism	Indicator for the 10 ha scheme	Basis
	users	recharge	
Social: safety and mobility	Less runoff reaching wadi crossings and roads	Each harvested hectare holds all the runoff of the 5-year design day and 55% of the 10-year day; Hatta flash floods have trapped vehicles on roads	This study; [47]
Environmental: groundwater	Daily emptying into recharge wells	Up to about 1,750 m^3 a year of recharge; groundwater supplies about half of UAE water use and its storage falls by about 0.97 km^3 a year	[48, 49]
Environmental: carbon	Avoided desalination energy	About 2.2 t CO_2 a year at 0.35 kg CO_2 per kWh	[50]
Environmental: evaporation	Closed tanks emptied within a day	Negligible evaporation loss and no standing open water	This study
Trade-offs	Smaller inflow to Al Khattem Dam; embodied impact of the tanks; visual intrusion	Overflow returns to the wadi; embodied impact as in Section 5.1	This study

Economic impact. The direct value of the water is small: about AED 2,600–4,600 a year for the 10 ha scheme if it only replaces desalination at production cost, and up to about AED 15,400 a year where it replaces water bought at the residential tariff. Water alone will therefore not repay the tanks. The

economic case rests on three further benefits. First, water reaches places where supply is expensive, such as heritage farms whose aflaj have needed water from DEWA [32]. Second, every cubic metre stored on the slope is a cubic metre that does not reach roads and buildings during a flood, in a country where the April 2024 floods caused insured losses of USD 2.9–3.4 billion [46]. Third, recharge adds to an aquifer whose depletion raises the cost of pumping. The monetary value of avoided flood damage needs local damage data and is left for the pilot.

Social impact. The system brings water to farms and households near the tributaries without pumps or power, which suits small, dispersed users. It also reduces runoff at the point where it first threatens people: each harvested hectare stores all the runoff of the 5-year design day and 55% of that of the 10-year day before it reaches wadi crossings. In Hatta, flash floods have trapped vehicles in the valleys and forced the police to clear boulders from roads [47]. Fewer and shorter road closures, and cleaner crossings thanks to the sediment traps, are direct gains for residents and for the tourism economy of the area. Installation, inspection after each flood and desilting also create local maintenance work.

Environmental impact. The water goes back into the ground. Groundwater provides about half of the water used in the UAE and is being depleted [49], with the national storage falling by about 0.97 km^3 a year [48]. Because the tanks are closed and empty within a day, almost none of the harvested water is lost to evaporation, unlike open reservoirs. Replacing desalinated water saves about 6,300 kWh and 2.2 t of CO_2 a year for the 10 ha scheme. The main environmental risks are a smaller inflow to Al Khattem Dam and to downstream wetlands, and the embodied impact of the tanks. Both are limited by design: the tanks take only the first part of each flood from small side ravines, every station overflows back to the wadi, and the material measures of Section 5.1 reduce the embodied impact.

6. Discussion and limitations

Scale. The system is viable only at the tributary scale. One hectare at the 10-year design needs 13 modules; the 30 km^2 Hatta sub-catchment would need about 39,000. This is why the tanks are

proposed as a complement to the dams, not a replacement: they intercept water early, near users, and pass everything else downstream. Because the overflow continues to the dams, the scheme redistributes water in space rather than competing for it.

Design return period. The 10-year basis guarantees capture on all but rare days, but most of that storage sits idle. The yield analysis shows that a 5-year capacity gives 86% of the 10-year yield (165 vs 191 m^3/ha/yr) with 54% of the modules. The authors therefore recommend designing storage for the 5-year day and checking overflow, anchors and spillways for the 100-year day.

Structural design. On ophiolite rock, the bearing pressure of small GRP tanks is negligible, so the usual foundation question is the wrong one. What matters is the empty tank in a flood (uplift) and the joint pattern of the bank (sliding). Both are cheap to handle when known: four 1.5 m anchors per module, and a joint survey that excludes adversely dipping blocks. Keeping tanks at 2 m height also keeps panel pressure, wind moment and flood exposure low.

Daily emptying. A DN20 orifice gives an 11.5 h emptying time, but fine sediment can clog it. The first tank of each cascade must therefore act as a settling tank, outlets must be screened, and the system needs inspection after every runoff day. Recharge wells, not tanks, are likely to limit daily throughput, because one well accepts only about 170–340 m^3/d.

Water quality and use. Flood water carries sediment and possibly faecal contamination from livestock. Without treatment it is suitable for recharge, ponds, irrigation and washing, not drinking. Recharge water should meet the local aquifer protection rules, and the settling tank and screens reduce turbidity before injection.

Limitations. This is a conceptual design without field data. (i) Design rainfall is transferred from the northern UAE wadis [16] and not from a Hatta gauge. (ii) CN is assumed, not calibrated; Table 9 shows it is the dominant uncertainty. (iii) The stochastic generator matches the published 2- and 10-year values but not a measured daily series. (iv) Rock strength values bracket typical ophiolite rocks and must be replaced by tests on site samples; wind and earthquake actions follow the Dubai

Building Code [25], but its seismic parameters are given for Dubai and should be confirmed for the Hatta exclave, and the 200 kPa bearing cap must be confirmed by a site geotechnical report. (v) Costs, land tenure, permits and the Ramsar status of parts of the catchment are not assessed. (vi) Tributary areas were not mapped from a DEM in this study, so no site-specific tank count is given.

Next steps. Measure rainfall and flow at a pilot tributary for two seasons, calibrate CN, map candidate terraces with a 5 m DEM and a joint survey, test rock samples, and build one 4-module pilot station with a recharge well. The design charts in Tables 2–5 can then be applied to each Hatta tributary in turn.

7. Conclusions

1. Decentralized, gravity-fed GRP tank stations are feasible for small ungauged tributaries of the Hatta catchment (about 0.5–5 ha), not for the main wadi channels, which are already served by dams.
2. With the adopted 10-year design day (80 mm, CN = 80), runoff is 34.6 mm, or 346 m^3/ha, requiring 13 standard modules per hectare split between the right and left banks.
3. The optimal standard module is 4 × 4 × 2 m (28.8 m^3 usable, 64 panels, 1.8 t empty), with 3 × 3 × 2 m for narrow terraces. Modules higher than 2 m bring little benefit.
4. A station of up to 16 modules (8 per bank) serves about 1.3 ha at the 10-year design or 2.4 ha at the 5-year design, fed by a DN250–DN315 intake main.
5. A screened DN20 bottom outlet per tank empties a full module in 11.5 h without electricity. Each full station needs two to three recharge wells, or a combination of wells, ponds and farm connections.
6. Bearing on rock is not critical: the module applies 20.8 kPa against the adopted 200 kPa allowable pressure (factor of safety 9.6, or 8.2 under the Dubai Building Code earthquake). The design is governed by uplift of an empty inundated tank (four Ø25 anchors, 1.5 m

embedment) and by planar sliding of the bank block, which excludes clean joints dipping more than about 23° out of the slope.

7. Long-term simulation shows that a 5-year capacity (189 m^3/ha, 7 modules/ha) captures 79% of mean runoff and uses storage 1.6 times more intensively than the 10-year capacity; it is recommended as the economic optimum.
8. Curve number and design rainfall dominate the uncertainty. A gauged pilot tributary should precede wider deployment.
9. An undammed right-bank tributary in UAE territory located in Hatta town between Hatta Dam and Al Khattem Dam, is proposed for a 4-module pilot station before any wider roll-out.
10. GRP sectional panels remain the best structural choice; bio-based resin, panel reuse, planned cement-kiln end of life and right-sizing (about 37% less embodied impact per m^3 of water at the 5-year capacity) make them more sustainable, with one-piece recycled-content polyethylene as the option for small stations.

CRediT authorship contribution statement

R. Y. M. Allam: Conceptualization, Methodology, Formal analysis, Investigation, Visualization, Writing – original draft, Writing – review & editing. **Rafik Belarbi:** Supervision, Validation, Funding acquisition, Project administration.

Declaration of competing interest

The authors declare the following financial interests/personal relationships which may be considered as potential competing interests: R. Y. M. Allam is employed by Capital Engineering Consultancy, Dubai. The company did not fund the study or influence its design, analysis or conclusions. The authors declare no other competing interests.

Funding

This research did not receive any specific grant from funding agencies in the public, commercial, or not-for-profit sectors.

Data availability

All data used are given in the article. The Python calculation scripts and their output are provided as supplementary material (Appendix A).

Declaration of generative AI and AI-assisted technologies in the manuscript preparation process

During the preparation of this work the authors used AI tool to search and summarize the literature, write and run the calculation scripts, and draft and edit the text. All figures were prepared by the authors without AI tools; Figure 3 is a Google Earth view. After using this tool, the authors reviewed and edited the content as needed and take full responsibility for the content of the published article.

Appendix A. Supplementary data

Supplementary File S1 (Python scripts hatta_calc.py, dbc_update.py and details.py, with their output results.json) is provided with this article.

References

[1] Ramsar Convention. *Ramsar Information Sheet: Hatta Mountain Reserve, United Arab Emirates (Site no. 2368)*; Ramsar Sites Information Service, 2019. https://rsisd10.unepgrid.ch/RISapp/files/RISrep/AE2368RIS_1901_en.pdf

[2] Feulner, G.R. The mountain regions of the United Arab Emirates: an ecosystem perspective. In *A Natural History of the Emirates*; Burt, J.A., Ed.; Springer: Cham, Switzerland, 2023; pp. 161–. doi:10.1007/978-3-031-37397-8_6

[3] World Bank. Climate Change Knowledge Portal: United Arab Emirates – current climate. https://climateknowledgeportal.worldbank.org/node/4318 (accessed on 15 November 2026).

[4] Sherif, M.; Almulla, M.; Shetty, A.; Chowdhury, R.K. Analysis of rainfall, PMP and drought in the United Arab Emirates. *Int. J. Climatol.* **2014**, 34(4), 1318–1328. https://research.uaeu.ac.ae/en/publications/analysis-of-rainfall-pmp-and-drought-in-the-united-arab-emirates/

[5] Sherif, M.; Chowdhury, R.; Shetty, A. Rainfall and intensity-duration-frequency (IDF) curves in the United Arab Emirates. In *World Environmental and Water Resources Congress 2014*; ASCE: Portland, OR, USA, 2014. https://research.uaeu.ac.ae/en/publications/rainfall-and-intensity-duration-frequency-idf-curves-in-the-unite/

[6] Gulf News. UAE witnesses largest amount of rainfall in 75 years (National Centre of Meteorology data). 17 April 2024. https://gulfnews.com/uae/weather/uae-witnesses-largest-amount-of-rainfall-in-75-years-1.1713319645595

[7] Gulf News. How UAE is preparing its 103 dams, water facilities for the rainy season. 2025. https://gulfnews.com/uae/uae-completes-preventive-maintenance-of-103-dams-and-water-facilities-ahead-of-rainy-season-1.500380756

[8] MEED. Dubai Municipality tenders Hatta dams rehabilitation project. 27 March 2026. https://guest.meed.com/dubai-tenders-hatta-dams-rehabilitation-project/

[9] MEED. Dubai Municipality extends bid deadline for Hatta dams project. 29 April 2026. https://www.meed.com/dubai-municipality-extends-bid-deadline-for-hatta-dams-project

[10] Sherif, M.M.; Mohamed, M.M.; Shetty, A.; Almulla, M. Rainfall-runoff modeling of three wadis in the northern area of UAE. *J. Hydrol. Eng.* **2011**, 16(1), 10–20. doi:10.1061/(ASCE)HE.1943-5584.0000280

[11] Boers, T.M.; Ben-Asher, J. A review of rainwater harvesting. *Agric. Water Manag.* **1982**, 5(2), 145–158. doi:10.1016/0378-3774(82)90003-8

[12] CEN. *EN 13280:2001 Specification for glass fibre reinforced cisterns of one piece and sectional construction, for the storage, above ground, of cold water*; European Committee for Standardization: Brussels, Belgium, 2001. https://genorma.com/en/standards/en-13280-2001/amp

[13] Arman, H.; El Tokhi, M.; Amin, B.M. Some mechanical and physical properties of the gabbroic rocks in the North Hatta area, Fujuirah, United Arab Emirates. In *Proceedings of the 13th ISRM International Congress of Rock Mechanics*, Montreal, Canada, 10–13 May 2015; CIM. https://research.uaeu.ac.ae/en/publications/some-mechanical-and-physical-properties-of-the-gabbroic-rocks-in-/

[14] Styles, M.; Ellison, R.; Arkley, S.; Crowley, Q.G.; Farrant, A.; Goodenough, K.M.; McKervey, J.; Pharaoh, T.; Phillips, E.; Schofield, D.; Thomas, R.J. *The Geology and Geophysics of the United Arab Emirates, Volume 2: Geology*; UAE Ministry of Energy, Petroleum and Minerals Sector: Abu Dhabi, UAE, 2006. https://nora.nerc.ac.uk/id/eprint/6601/

[15] Dubai Electricity and Water Authority (DEWA). Hydroelectric power plant in Hatta. https://www.dewa.gov.ae/en/about-us/strategic-initiatives/hatta-project (accessed on 15 November 2026).

[16] Sherif, M.; Akram, S.; Shetty, A. Rainfall analysis for the northern wadis of United Arab Emirates: a case study. *J. Hydrol. Eng.* **2009**, 14(6), 535–544. doi:10.1061/(ASCE)HE.1943-5584.0000015

[17] Gumbel, E.J. *Statistics of Extremes*; Columbia University Press: New York, NY, USA, 1958. doi:10.7312/gumb92958

[18] USDA Natural Resources Conservation Service (USDA-NRCS). *National Engineering Handbook, Part 630 Hydrology, Chapter 10: Estimation of Direct Runoff from Storm Rainfall* (210-VI-NEH); USDA-NRCS: Washington, DC, USA, July 2004. https://damsafety.org/content/national-engineering-handbook-part-630-hydrology-chapter-10-estimation-direct-runoff-storm

[19] Ibrahim, H.I.A.; Wageeh, A.; Hamouda, M.A.; Ahmed, A.; Gad, A. Impact of LULC classification methods on runoff simulation in an arid mountainous watershed using remote sensing and machine learning. *Earth* **2026**, 7(1), 26. https://research.uaeu.ac.ae/en/publications/impact-of-lulc-classification-methods-on-runoff-simulation-in-an-/

[20] Al-Qurashi, A.; McIntyre, N.; Wheater, H.; Unkrich, C. Application of the Kineros2 rainfall–runoff model to an arid catchment in Oman. *J. Hydrol.* **2008**, 355, 91–105.

[21] Thiem, G. *Hydrologische Methoden*. Dr.-Ing. Dissertation, 1906. https://www.deutsche-biographie.de/pnd117336645.html

[22] Houben, G.J.; Batelaan, O. The Thiem team – Adolf and Günther Thiem, two forefathers of hydrogeology. *Hydrol. Earth Syst. Sci.* **2022**, 26, 4055–4091. doi:10.5194/hess-26-4055-2022

[23] Dillon, P. Future management of aquifer recharge. *Hydrogeol. J.* **2005**, 13(1), 313–316. doi:10.1007/s10040-004-0413-6

[24] Hoek, E.; Carranza-Torres, C.; Corkum, B. Hoek–Brown failure criterion – 2002 edition. In *Proceedings of NARMS-TAC 2002, Mining Innovation and Technology*; Hammah, R., Bawden, W., Curran, J., Telesnicki, M., Eds.; University of Toronto: Toronto, Canada, 2002; pp. 267–273. https://www.d.umn.edu/~carranza/HB02

[25] Government of Dubai. *Dubai Building Code*, 2021 Edition; Dubai, UAE, 2021. Part F: Structure, Clause F.7.12 and Table F.10 (wind); Clause F.7.13 and Tables F.13–F.16 (earthquake).

[26] Canadian Geotechnical Society. *Canadian Foundation Engineering Manual*, 4th ed.; BiTech Publishers: Richmond, BC, Canada, 2006. https://cgs.ca/pdf/CFEM%20Flyer%20July%202014.pdf

[27] BSI. *BS 8081:2015+A2:2018 Code of practice for grouted anchors*; British Standards Institution: London, UK, 2019. https://knowledge.bsigroup.com/products/code-of-practice-for-grouted-anchors

[28] Housner, G.W. The dynamic behavior of water tanks. *Bull. Seismol. Soc. Am.* **1963**, 53(2), 381–387. doi:10.1785/BSSA0530020381

627 [29] Wyllie, D.C.; Mah, C.W. *Rock Slope Engineering: Civil and Mining*, 4th ed.; Spon Press: London, UK,
628 2004.
629 [30] Federal Geographic Information Center (FGIC). UAE Federal SDI geoportal and ArcGIS REST
630 services Watershed_UAE, UAE_WaterShed25, DTM, UAE_Contour and Contour_10m
631 (https://stgnsdi.fgic.gov.ae/publishing/rest/services). https://geoportal.fgic.gov.ae/geoportal/
632 (accessed on 15 November 2026).
633 [31] Google. Google Maps and Google Earth, Hatta, Dubai: Hatta Dam, Al Khattem Dam, Suhaila
634 Dam, Hatta Hidden Lake Dam and Al Khileban Dam (Masfut) listings
635 (https://www.google.com/maps/place/Hatta,+Dubai); Google Earth view of Hatta
636 (https://earth.google.com/web/@24.83083846,56.08788204,399.42697586a,29790.68689365d,35y,0h,
637 0t,0r) (accessed on 15 and 19 November 2026).
638 [32] Khaleej Times. A noble deed from Shaikh Mohammed (DEWA water supply to the aflaj of Hatta
639 heritage farms). https://khaleejtimes.com/article/a-noble-deed-from-shaikh-mohammed?amp=1
640 (accessed on 15 November 2026).
641 [33] O'Callaghan, J.F.; Mark, D.M. The extraction of drainage networks from digital elevation data.
642 *Comput. Vis. Graph. Image Process.* **1984**, 28(3), 323–344. doi:10.1016/S0734-189X(84)80011-0
643 [34] Hawkins, R.H. Asymptotic determination of runoff curve numbers from data. *J. Irrig. Drain. Eng.*
644 **1993**, 119(2), 334–345. doi:10.1061/(ASCE)0733-9437(1993)119:2(334)
645 [35] Ghimire, S.R.; Johnston, J.M.; Ingwersen, W.W.; Sojka, S. Life cycle assessment of a commercial
646 rainwater harvesting system compared with a municipal water supply system. *J. Clean. Prod.*
647 **2017**, 151, 74–86. doi:10.1016/j.jclepro.2017.02.025
648 [36] National Composites Centre. GRP recycling (project summary).
649 https://www.nccuk.com/media/qfrecxbc/recycling.pdf (accessed on 15 November 2026).
650 [37] Composites UK. End of life and recycling. https://compositesuk.co.uk/composite-
651 materials/faq/end-of-life-options/ (accessed on 15 November 2026).

652 [38] Enduramaxx. Tanks for water, wastewater and chemicals (rotationally moulded polyethylene
653 water storage tanks, 50–30,000 litres). https://blog.enduramaxx.co.uk/news/tanks-for-water-
654 wastewater-chemicals (accessed on 15 November 2026).
655 [39] Rashid, A.R.M.M.O.; Bhuiyan, M.A.; Pramanik, B.K.; Jayasuriya, N. Life cycle assessment of
656 rainwater harvesting system components – to determine environmentally sustainable design. *J.*
657 *Clean. Prod.* **2021**, 326, 129286. doi:10.1016/j.jclepro.2021.129286
658 [40] Parker, A.; Cruddas, P.; Rowe, N.; Carter, R.; Webster, J. Tank costs for domestic rainwater
659 harvesting in East Africa. *Proc. Inst. Civ. Eng. Water Manag.* **2013**, 166(10), 536–545.
660 https://researchportal.port.ac.uk/en/publications/tank-costs-for-domestic-rainwater-harvesting-
661 in-east-africa/
662 [41] Parkes, C.; Kershaw, H.; Hart, J.; Sibille, R.; Grant, Z. *Energy and Carbon Implications of Rainwater*
663 *Harvesting and Greywater Recycling*; Report SC090018; Environment Agency: Bristol, UK, 2010.
664 https://assets.publishing.service.gov.uk/media/5a7bfda6e5274a7318b905b9/scho0610bsmq-e-
665 e.pdf
666 [42] CompositesWorld. Practical steps to making composites more sustainable.
667 https://www.compositesworld.com/articles/practical-steps-to-making-composites-more-
668 sustainable (accessed on 15 November 2026).
669 [43] Aquatech. UAE to phase in more membranes in SWRO desalination push.
670 https://aquatechtrade.com/news/desalination/emirates-pushing-new-investment-drive-for-ro-
671 desalination (accessed on on 15 November 2026).
672 [44] Property Finder. Dubai utility bills: DEWA residential water slabs (AED 7.70, 8.80 and 10.12 per
673 m^3). https://www.propertyfinder.ae/blog/?p=199361 (accessed on on 15 November 2026).
674 [45] Masdar. Renewable Energy Water Desalination Programme, Abu Dhabi, UAE (electric energy
675 consumption below 3.6 kWh per m^3 of produced water). https://masdar.ae/-
676 /media/corporate/projects/downloads/renewable-energy-desalination-pilot/renewable-energy-
677 water-desalination-programme_v3.pdf (accessed on on 15 November 2026).

[46] Guy Carpenter. Improving flood risk quantification and management: lessons from the 2024 Gulf flooding. May 2025. https://www.guycarp.com/insights/2025/05/improving-flood-risk-quantification-management-gulf-flooding-2024.html

[47] Gulf News. Dubai Police save 5 vehicles from being swept away by floods in Hatta. February 2024. https://gulfnews.com/uae/weather/dubai-police-save-5-vehicles-from-being-swept-away-by-floods-in-hatta-1.101050610

[48] Gonzalez Sanchez, M.R. Water Budget Analysis in the United Arab Emirates. MSc thesis, Masdar Institute of Science and Technology, Abu Dhabi, UAE, 2015. https://khazna.ku.ac.ae/en/studentTheses/water-budget-analysis-in-the-united-arab-emirates/

[49] The National. Can the UAE harvest this week's heavy rains to improve water security? 29 March 2026. https://www.thenationalnews.com/news/uae/2026/03/29/can-the-uae-harvest-this-weeks-heavy-rains-to-improve-water-security

[50] Abu Dhabi Media Office. EWEC forecasts halving CO2 emissions from water and electricity production by 2025 (average CO2 intensity of electricity generation 350 g/kWh in 2018). https://mediaoffice.abudhabi/en/energy/ewec-forecasts-halving-co2-emissions-from-water-and-electricity-production-by-2025/ (accessed on on 15 November 2026).