Research Square

Preprints are preliminary reports that have not undergone peer review.
They should not be considered conclusive, used to inform clinical practice,
or referenced by the media as validated information.

A Linear Formulation of Asynchronous Boolean Control Network for Biological Systems

Haimabati Das
Indian Institute of Technology Bhubaneswar
James Gomes
Indian Institute of Technology Delhi
Soumen Basak
National Institute of Immunology
Niladri B Puhan (Corresponding author)
nbpuhan@iitbbs.ac.in

Indian Institute of Technology Bhubaneswar

Article

Keywords:

Posted Date: November 24th, 2026

DOI: https://doi.org/10.21203/rs.3.rs-11712383/v1

License: This work is licensed under a Creative Commons Attribution 4.0 International License.
Read Full License

Additional Declarations: No competing interests reported.

A Linear Formulation of Asynchronous Boolean Control Network for Biological Systems

Haimabati Das [1], James Gomes[2], Soumen Basak[3], Niladri B Puhan (Corresponding author)[1*]

[1]School of Electrical and Computer Sciences, Indian Institute of Technology, Bhubaneswar, 752050, Odisha, India.
[2]Kusuma School of Biological Sciences, Indian Institute of Technology, New Delhi, 110016, India.
[3] National Institute of Immunology, New Delhi, 110067, India.

*Corresponding author(s). E-mail(s): nbpuhan@iitbbs.ac.in;
Contributing authors: haimabati.das@gmail.com;
jgomes@bioschool.iitd.ac.in; sobasak@nii.ac.in;

Abstract

In order to describe the temporal dynamics of genetic regulatory networks (GRNs), an asynchronous Boolean control network (ABCN) model that incorporates different time delays for individual nodes is considered. The semi-tensor product of matrices, a widely used mathematical tool, is utilized to provide a methodology for the algebraic (linear) representation of the model dynamics. The steady states and stability analysis of the linear ABCN model are also discussed. The effectiveness of the proposed approach is demonstrated using the NFκB apoptosis signalling pathways as an illustrative example. In addition, a comparison of the steady states between the existing Boolean control network model and proposed ABCN model for the biological pathways is mentioned.

Keywords: Genetic regulatory network, asynchronous Boolean network, semi-tensor product, NFκB pathway, delay, attractors.

1 Introduction

The mathematical modeling and control of GRNs have a significant impact on the development of systematic approaches for drug testing and effective therapeutic intervention for treatment of human diseases. Since last five decades, various mathematical and computational

models of GRNs such as differential equations, Boolean networks, probabilistic Boolean networks, etc. have been developed [1]. In order to analyze the complex and non-linear dynamics of biological systems, it is essential to use experimental data to standardize and verify proposed computational models. Among all the models, Boolean networks (BNs) have been extensively used in systems biology because it is the most simple and efficient tool for modeling and performing qualitative analysis of large-scale biological networks [2]. In the BN model, each node represents a biological variable (e.g., gene, protein, mRNA, small molecules, etc.) and its value (expression level) is quantized to only two levels, ON and OFF, representing active and inactive states, respectively. The state of each node is updated by the states of its regulating nodes via logical rules. In Boolean modeling, molecular interactions are described qualitatively by logical functions such as AND, OR, and NOT.

Although the BN model does not require the knowledge of any kinetic parameters (e.g., rate constants), being an oversimplified model, it is unable to provide the detailed temporal dynamics of a biological network. In addition, the model assumes all genes in the network take an equivalent amount of time to switch their states which is biologically unrealistic. Because, in a real biological network, different kinds of molecular interactions occur over a wide range of time scales, ranging from fractions of a second to several hours [3]. To resolve this limitation, the asynchronous Boolean network (ABN) model was developed that assumes different nodes (genes) being updated at different time instances [4]. Although the dynamics are different between a BN and an ABN model, the steady states remain same.

A real biological network includes exogenous inputs and hence, it is necessary to add binary control inputs to the BN model which yields Boolean control network (BCN). From a biological perspective, a binary input may represent a medication intervention initiated at a certain time step. The manuscript thus proposes an asynchronous Boolean network model having control inputs called as asynchronous Boolean control network (ABCN). In the model, nodes are associated with distinct delay values (positive real numbers) which are essentially an abstraction of the continuous time frames required for the transcription and translation processes of various genes in the network. The ABCN model is used to design appropriate therapeutic intervention strategies that move the network from an undesirable state (disease condition) into a desirable one (healthy condition).

Recently, Daizhan Cheng and his colleagues developed a new mathematical tool, known as semi-tensor product (STP) of matrices, for algebraic state space representation of logical functions [5]. Using the algebraic framework, a Boolean (control) network can be transformed into a linear (bilinear) discrete-time dynamic (control) system [6]. In the last decade, this representation proved very useful for addressing different control-theoretic problems based on BCNs, e.g., the analysis of controllability and observability [7], stability and stabilization [8, 9], and so forth. Some research papers [10–13] also discussed the controllability analysis of BCNs considering the state delays. The models developed in these research articles commonly assumed that all the nodes in the network have the same delay. The asynchronous Boolean network model developed in [14] considers different time delays of nodes in the network; however it does not consider any control inputs. Therefore, the motivation of the current research work is to propose a method for algebraically formulating an ABCN model having different time delays for different nodes.

The main contributions of this manuscript are as follows.

i. Using the framework of STP of matrices, an effective method is proposed for algebraic state space representation of the dynamics of an ABCN model having different time delays for different nodes, and its stability analysis is presented.
ii. The proposed methodology is validated by developing an algebraic ABCN model of the NFκB apoptosis signalling pathways.
iii. A comparison between the algebraic formulations of existing BCN and proposed ABCN model for the pathway in terms of steady states is mentioned.

The rest of the manuscript is structured as follows. Section 2 presents a brief introduction on STP of matrices and its properties followed by the model formulation. Section 3 discusses the proposed methodology for algebraic state space representation of the ABCN model and includes stability analysis of the model. Results and examples are given in Section 4 to demonstrate the effectiveness of the proposed methodology. The methodology has been validated for the NFκB apoptosis signaling pathways in response to the tumour necrosis factor α (TNF). Finally, Section 5 presents concluding remarks and outlines the future directions.

2 Preliminaries and Problem Formulation

2.1 Preliminaries on STP of Matrices

A brief introduction on some basic concepts and properties of the STP of matrices is provided here, which are recapitulations of the results from [5] and [6].

Notations: In the manuscript, the following standard notations will be used.

i. $\mathcal{D} := \{F = 0, T = 1\}$ represents the logical domain of a variable.
ii. $\mathcal{R}_{m\times n}$ denotes the set of $m \times n$ real matrices.
iii. $\mathbf{1}_{m\times n} \in \mathcal{R}_{m\times n}$ is the matrix of all 1s.
iv. δ_n^i represents the i-th column of the $n \times n$ identity matrix I_n, e.g., $\delta_2^1 = [1\ 0]^T$, $\delta_2^2 = [0\ 1]^T$.
v. Δ_n represents the set of all n columns of I_n, i.e., $\Delta_n = \{\delta_n^1, \delta_n^2, \ldots, \delta_n^n\}$. For compactness, denote $\Delta := \Delta_2$. Δ is the vector form of the logical domain $\mathcal{D}$, i.e., $1 \sim \delta_2^1$ and $0 \sim \delta_2^2$.
vi. A matrix $B \in \mathcal{R}_{m\times n}$ is called a Boolean matrix, if its entries $b_{i,j} \in \mathcal{D},\ \forall i, j$. The set of $m \times n$ Boolean matrices is denoted by $\mathcal{B}_{m\times n}$.
vii. A matrix $B \in \mathcal{R}_{m\times n}$ is called a logical matrix if the columns of B, denoted by Col(B), satisfy $Col_i(B) \in \Delta_m\, \forall 1 \le i \le n$. The set of $m \times n$ logical matrices is denoted by $\mathscr{L}_{m\times n}$.
viii. Assume a matrix $\mathrm{A} \in \mathscr{L}_{m\times n}$, which implies $\mathrm{A} = [\delta_m^{i_1}, \delta_m^{i_2}, \ldots, \delta_m^{i_n}]$. In brief, it is denoted as $\mathrm{A} = \delta_m[i_1, i_2, \ldots, i_n]$.
ix. The symbols $\vee$, $\wedge$, $\neg$, $\leftrightarrow$, and $\oplus$ are used to represent logical fuunctions 'OR', 'AND', 'NOT', 'Equivalence', and 'Exclusive-OR' respectively.
x. Different types of math fonts are used to differentiate between variables, vectors, and matrices such as normal math italic for logical variables, bold upright Roman for algebraic state-space vectors, and normal upright Roman for all matrices.

Definition 2.1. *Given two matrices $A \in \mathcal{R}_{m\times n}$ and $B \in \mathcal{R}_{p\times q}$. The STP of A and B is defined as*

$$A \ltimes B = (A \otimes \mathrm{I}_{l/n})(B \otimes \mathrm{I}_{l/p})$$

where '$\otimes$' represents the Kronecker product and $l = lcm(n, p)$ is the least common multiple of n and p [6].

Proposition 2.1. *Given* $\mathrm{A} \in \mathscr{L}_{m\times n}$ *and* $\mathrm{B} \in \mathscr{L}_{p\times q}$, *then* $\mathrm{A} \ltimes \mathrm{B} \in \mathscr{L}_{(ml/n)\times(ql/p)}$, *where* $l = lcm(n,p)$.

For $n = p$, the STP degenerates to the conventional matrix product. Thus the STP of matrices is a generalized version of the conventional matrix product that provides a technique to multiply two matrices with arbitrary dimensions. All the basic properties of conventional matrix multiplication are applicable to the STP. Therefore, throughout the manuscript, every matrix product is assumed to be an STP, and the symbol "$\ltimes$" is omitted without any ambiguity. The STP of matrices has the following properties[5].

i. For any vectors $\mathbf{a} \in \Delta_m$ and $\mathbf{b} \in \Delta_n$,

$$\mathbf{ab} = \mathrm{W}_{[n,m]}\mathbf{ba} \;\text{ or }\; \mathbf{ba} = \mathrm{W}_{[m,n]}\mathbf{ab}$$

where $\mathrm{W}_{[m,n]} = [\mathrm{I}_n \otimes \delta_m^1, \cdots, \mathrm{I}_n \otimes \delta_m^m] \in \mathscr{L}_{mn\times mn}$ is called the swap matrix.

ii. For a logical variable, say $\mathbf{x} \in \Delta$, $\mathbf{x}^2 = \mathrm{M}_r\mathbf{x}$ where $\mathrm{M}_r = \delta_4[1,4]$ is called the power-reducing matrix.

iii. Let $\mathbf{X} = \ltimes_{i=1}^n \mathbf{x}_i \in \Delta_{2^n}$, then $\mathbf{X}^2 = \Phi_n\mathbf{X}$ where $\Phi_n \in \mathscr{L}_{2^{2n}\times 2^n}$, called the group power-reducing matrix, is given as

$$\Phi_n = \prod_{i=1}^{n} \mathrm{I}_{2^{i-1}} \otimes \left[\left(\mathrm{I}_2 \otimes \mathrm{W}_{[2,2^{n-i}]}\right)\mathrm{M}_r\right], \qquad \text{for}\, n \geq 1. \tag{1}$$

For example, $\Phi_3 \in \mathscr{L}_{64\times 8}$ can be obtained as $\Phi_3 = \delta_{64}[1,\ 10,\ 19,\ 28,\ 37,\ 46,\ 55,\ 64]$.

iv. To get a matrix expression, define $1 \sim \delta_2^1$ and $0 \sim \delta_2^2$. Using this representation, a logical function $f : \mathcal{D}^n \to \mathcal{D}$ becomes $f : \Delta_{2^n} \to \Delta_2$.

v. For any logical function $f(x_1,\ldots,x_n)$, there exists a unique structure matrix, $\mathrm{M}_f \in \mathscr{L}_{2\times 2^n}$ such that

$$f(x_1,\ldots,x_n) = \mathrm{M}_f\mathbf{x}_1\cdots\mathbf{x}_n \tag{2}$$

where the logical arguments $x_1,\cdots,x_n \in \mathcal{D}$ are represented in the vector form $\mathbf{x}_1,\ldots,\mathbf{x}_n \in \Delta_2$.

vi. The structure matrices of some fundamental binary logic functions are as follows. NOT/Negation ($\neg$):$\mathrm{M}_n = \delta_2[2,1]$, AND/Conjunction ($\wedge$):$\mathrm{M}_c = \delta_2[1,2,2,2]$, OR/Disjunction ($\vee$): $\mathrm{M}_d = \delta_2[1,1,1,2]$, Exclusive-OR ($\oplus$): $\mathrm{M}_x = \delta_2[2,1,1,2]$, Conditional/Implication ($\rightarrow$): $M_i = \delta_2[1,2,1,1]$, Biconditional/Equivalence ($\leftrightarrow$): $M_e = \delta_2[1,2,2,1]$.

2.2 Algebraic Representation of Boolean (Control) Network [6]

The dynamics of a BN with n nodes, say $x_1,\ldots,x_n$, can be expressed in the logical domain as

$$x_i(t+1) = f_i\big(x_1(t),\ldots,x_n(t)\big),\ t = 0,1,2,\ldots \tag{3}$$

where $f_i,\ i = 1,2,\ldots,n$, is the Boolean regulatory function for node x_i. The Boolean vector $X(t) = [x_1(t)\cdots x_n(t)]$ is represented in the form of an algebraic vector as $\mathbf{X}(t) = \ltimes_{i=1}^n \mathbf{x}_i(t) \in \Delta_{2^n}$. The initial condition of all the networks is assumed to be known throughout the

manuscript. Then (3) can be expressed in the linear form as

$$\mathbf{x}_i(t+1) = \mathrm{M}_i \mathbf{X}(t), \qquad i = 1, 2, \ldots, n \tag{4}$$

where $\mathrm{M}_i \in \mathscr{L}_{2\times 2^n}$ is the structure matrix for Boolean function f_i. The n equations of (4) can be combined to obtain the algebraic state transition form as

$$\begin{aligned} \mathbf{X}(t+1) &= \mathrm{M}_1 \mathbf{X}(t) \mathrm{M}_2 \mathbf{X}(t) \cdots \mathrm{M}_n \mathbf{X}(t) \\ &= \mathrm{F}\mathbf{X}(t) \end{aligned} \tag{5}$$

where $\mathrm{F} \in \mathscr{L}_{2^n\times 2^n}$, called the transition matrix of the BN (3), is expressed as

$$\mathrm{F} = \mathrm{M}_1 \prod_{i=2}^{n} (\mathrm{I}_{2^n} \otimes \mathrm{M}_i)\, \Phi_n. \tag{6}$$

Similarly, the dynamics of a BCN having n nodes, m inputs, and p outputs can be represented in the logical form as

$$x_i(t+1) = f_i\big(u_1(t), \ldots, u_m(t), x_1(t), \cdots, x_n(t)\big); i = 1, \cdots, n \tag{7}$$

$$y_j(t) = h_j\big(x_1(t), x_2(t), \cdots, x_n(t)\big); j = 1, \ldots, p \tag{8}$$

where $x_1, \ldots, x_n$ are logical variables, $u_1, \ldots, u_m$ are inputs (or controls), $y_1, \ldots, y_p$ are outputs, $f_i : \mathcal{D}^{n+m} \to \mathcal{D}^n$ and $h_j : \mathcal{D}^n \to \mathcal{D}^p$ are the logical functions. To get the algebraic form of logical dynamics, define the logical variables in the vector form, $\mathbf{U}(t) = \ltimes_{k=1}^{m} \mathbf{u}_k(t) \in \Delta_{2^m}$, $\mathbf{X}(t) = \ltimes_{i=1}^{n} \mathbf{x}_i(t) \in \Delta_{2^n}$, and $\mathbf{Y}(t) = \ltimes_{j=1}^{p} \mathbf{y}_j(t) \in \Delta_{2^p}$. The manuscript considers the control input to be a free Boolean sequence. Hence, the input control is basically a designed sequence $\mathbf{U}(0), \mathbf{U}(1), \cdots \in \Delta_{2^m}$.

Using the properties of semi-tensor product of matrices and logical expression of matrix, the BCN (7)-(8) can be expressed in a standard discrete-time dynamic control system as follows

$$\mathbf{x}_i(t+1) = \mathrm{M}_{f_i} \mathbf{U}(t) \mathbf{X}(t), \qquad i = 1, 2, \ldots, n \tag{9}$$

$$\mathbf{y}_j(t) = \mathrm{M}_{h_j} \mathbf{X}(t), \qquad j = 1, 2, \ldots, p \tag{10}$$

where $\mathrm{M}_{f_i} \in \mathscr{L}_{2\times 2^{m+n}}$ and $\mathrm{M}_{h_j} \in \mathscr{L}_{2\times 2^p}$ are the structure matrices for Boolean functions f_i and h_j respectively. The n equations of (9) can be merged to obtain the state transition form of the BCN (7) as

$$\begin{aligned} \mathbf{X}(t+1) &= \mathrm{M}_{f_1} \mathbf{U}(t) \mathbf{X}(t)\, \mathrm{M}_{f_2} \mathbf{U}(t) \mathbf{X}(t) \cdots \mathrm{M}_{f_n} \mathbf{U}(t) \mathbf{X}(t) \\ &= \mathrm{L}\, \mathbf{U}(t)\, \mathbf{X}(t) \end{aligned} \tag{11}$$

where $\mathrm{L} \in \mathscr{L}_{2^n\times 2^{m+n}}$ is called the control-depended network transition matrix of the BCN (7) and is given as

$$\mathrm{L} = \mathrm{M}_{f_1} (I_{2^{m+n}} \otimes \mathrm{M}_{f_2}) \Phi_{m+n} \cdots (I_{2^{m+n}} \otimes \mathrm{M}_{f_n}) \Phi_{m+n}$$

$$= \mathrm{M}_{f_1} \prod_{i=2}^{n} ((I_{2^{m+n}} \otimes \mathrm{M}_{f_i})\Phi_{m+n}. \tag{12}$$

Similarly, the p equations of (10) can be merged to get $\mathbf{Y}(t) = \mathrm{H}\mathbf{X}(t)$ where $\mathrm{H} \in \mathscr{L}_{2^p \times 2^n}$ is the transition matrix from state $\mathbf{X}(t)$ to output $\mathbf{Y}(t)$ and is given as

$$\begin{aligned} \mathrm{H} &= \mathrm{M}_{h_1}(I_{2^n} \otimes \mathrm{M}_{h_2})\Phi_n(I_{2^n} \otimes \mathrm{M}_{h_3})\Phi_n \cdots (I_{2^n} \otimes \mathrm{M}_{h_p})\Phi_n \\ &= \mathrm{M}_{h_1} \prod_{i=2}^{p} ((I_{2^n} \otimes \mathrm{M}_{h_i})\Phi_n. \end{aligned} \tag{13}$$

2.3 Problem Definition: Algebraic representation of ABCN

An ABCN $\Psi(\mathcal{V},\mathcal{W},\mathcal{F},\mathcal{H},\Omega)$ for n different nodes (e.g., gene, mRNA, protein) having m binary control inputs and p binary outputs is defined by a set of nodes $\mathcal{V} = \{x_1, x_2, \ldots, x_n\}$, a set of control inputs $\mathcal{W} = \{u_1, u_2, \ldots, u_m\}$, two sets of Boolean functions $\mathcal{F} = \{f_1, f_2, \cdots, f_n\}$ and $\mathcal{H} = \{h_1, h_2, \cdots, h_p\}$ where $f_i : \mathcal{D}^{m+n} \to \mathcal{D}^n$, $h_j : \mathcal{D}^n \to \mathcal{D}^p$ and a set of delays $\Omega = \{\tau_1, \cdots, \tau_n\}, \tau_i \in \mathbb{R}_+, \forall\ i = 1, \cdots, n$, for nodes $x_1, x_2, \ldots, x_n$ respectively. At time t, $x_i(t), y_j(t), u_k(t) \in \mathcal{D}$, $i = 1, 2, \cdots, n, j = 1, 2, \cdots, p, k = 1, 2, \cdots, m$, which in the algebraic domain is represented by $\mathbf{x}_i(t), \mathbf{y}_j(t), \mathbf{u}_k(t) \in \Delta_2$. The functions f_i and h_j are the regulatory functions of node x_i and output y_j respectively. Fig. 1 shows the block diagram of the proposed ABCN for n nodes comprising a sequence of control inputs $U(t)$, Boolean function blocks ($\mathcal{F}$ and $\mathcal{H}$), the delay block $(\tau_k, k = 1, 2, \cdots, n)$ and the outputs. The Boolean vectors $X^*(t) = \left[x_1(t), x_2(t), \cdots, x_n(t)\right]$ and $X(t) = \left[x_1(t-\tau_1), x_2(t-\tau_2), \cdots, x_n(t-\tau_n)\right]$ are separated by the delay block (τ_k) and control input $U(t)$. Assuming $\mathcal{F}$ and $\mathcal{H}$ to be instantaneous, the state $X(t)$ immediately changes $X^*(t)$ by the rule, $X^*(t) = \mathcal{F}(U(t), X(t))$ and the output is given by $Y(t) = \mathcal{H}(X^*(t))$. The next state of $X(t)$ depends on the value of delays and control inputs, and the state transition dynamics in the proposed ABCN model is developed on $X(t)$. Therefore, the vectors $X^*(t)$ and $X(t)$ are called as the intermediate-state and the state of the ABCN model respectively. The proposed ABCN model considers delays associated with transcription and assumes protein-protein interactions and other interactions of similar nature to be instantaneous and negligibly small.

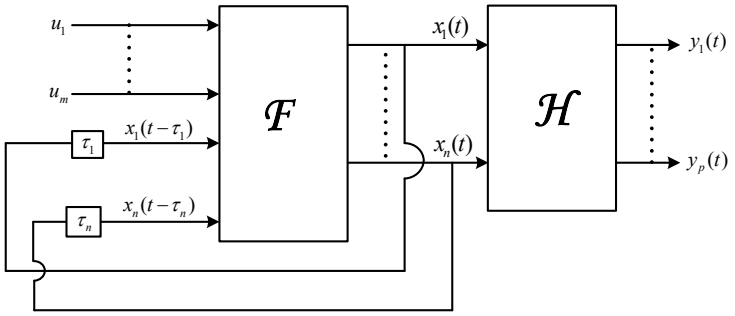

Fig. 1 A schematic block diagram representation of the proposed ABCN model for n nodes, m binary inputs, and p binary outputs.

The dynamics of the proposed ABCN model having different time delays corresponding to different nodes as shown in Fig. 1 can be represented in the logical domain as

$$x_i(t) = f_i\big(u_1(t),\cdots,u_m(t),x_1(t-\tau_1),\ldots,x_n(t-\tau_n)\big); i = 1,\ldots,n \tag{14}$$

$$y_j(t) = h_j\big(x_1(t),x_2(t),\cdots,x_n(t)\big); j = 1,2,\ldots,p \tag{15}$$

where $\tau_i \in \mathbb{R}_+, i = 1,2,\cdots,n$ represents the time delays corresponding to nodes $x_1,x_2,\cdots,x_n$ respectively, $X(t) = \Big(x_1(t-\tau_1),x_2(t-\tau_2),\cdots,x_n(t-\tau_n)\Big) \in \mathcal{D}^n$ represents the state at time t, $U(t) = (u_1(t),u_2(t),\cdots,u_m(t)) \in \mathcal{D}^m$ represents the control input at time t, $Y(t) = (y_1(t),y_2(t),\cdots,y_p(t)) \in \mathcal{D}^p$ represents the output at time t, and $f_i : \mathcal{D}^{n+m} \to \mathcal{D}^n$, $h_j : \mathcal{D}^n \to \mathcal{D}^p$ are the logical regulatory functions. The initial state of system (14) can be one from the set of 2^n number of possible states, e.g., $\big\{[0,0,0,...(n-2)\text{times},0,0],[0,0,0,...(n-2)\text{times},0,1],[0,0,0,...(n-2)\text{times},1,0],[0,0,0,...(n-2)\text{times},1,1],...,[1,1,1,...(n-2)\text{times},1,1]\big\}$ based upon the application or any predetermined condition.

In order to use the algebraic approach, let us define $\mathbf{U}(t) = \ltimes_{i=1}^{m}\mathbf{u}_i(t) \in \Delta_{2^m}$, $\mathbf{Y}(t) = \ltimes_{i=1}^{p}\mathbf{y}_i(t) \in \Delta_{2^p}$, $\mathbf{X}^*(t) = \ltimes_{i=1}^{n}\mathbf{x}_i(t) \in \Delta_{2^n}$, and $\mathbf{X}(t) = \ltimes_{i=1}^{n}\mathbf{x}_i(t-\tau_i) \in \Delta_{2^n}$. Then, $\mathbf{X}^*(t) = \mathrm{F}\mathbf{U}(t)\mathbf{X}(t)$ and $\mathbf{Y}(t) = \mathrm{H}\mathbf{X}^*(t)$ where $\mathrm{F} \in \mathscr{L}_{2^n\times 2^{m+n}}$ and $\mathrm{H} \in \mathscr{L}_{2^p\times 2^n}$ can be calculated using the conventional method as discussed in Section II.B. Given the set of delays (Ω), control input sequence ($\mathbf{U}(t)$), and the present state at time t ($\mathbf{X}(t)$), the research objective is to find out the next state, $\mathbf{X}(t+\Delta t(t,\mathbf{U}(t),\mathbf{X}(t)))$, where $\Delta t(t,\mathbf{U}(t),\mathbf{X}(t))$ represents the state transition time delay. In the linear (algebraic) form, the goal is to represent it as, $\mathbf{X}(t+\Delta t(t,\mathbf{U}(t),\mathbf{X}(t))) = \mathrm{Z}\mathbf{U}(t)\mathbf{X}(t)$, where $\mathrm{Z} \in \mathscr{L}_{2^n\times 2^{m+n}}$ is called the control-dependent network transition matrix of the proposed ABCN model (14). The present manuscript proposes a methodology to compute Z and $\Delta t(t,\mathbf{U}(t),\mathbf{X}(t))$ and discusses the stability analysis of the model.

3 METHODOLOGY

The proposed ABCN model is founded on the previously estalished ABN model defined in [14] because it includes node-level delays as opposed to state-level delays. This necessitates the incorporation of distinct time delays into the model for each node (gene), which are subsequently converted into varying delays between states. The model additionally takes into account true time delays that arise inside a biological network in order to update the nodes, rather than adhering to any predetermined criteria. However, the model developed in [14] does not consider any external control inputs which are inevitable in a biological network. Therefore, the present ABCN model incorporates binary control inputs in order to provide a more accurate and realistic representation of a biological network. Furthermore, the methodologies for obtaining the network transition matrix and the next state transition time point differ across the two models, despite the similarity in the notion of incorporating asynchronism as explained in this Section.

The continuous-time dynamical system represented through Boolean state vectors (discrete-state) will have finite and countable number of state transitions. Therefore, without loss of generality, one can index the set of state-transition time points as $T = \{t_1,t_2,\cdots,t_k,t_{k+1},\cdots\}$ starting from the initial time point $t_1 \geq 0$, where $t_{k+1} = t_k + \tau_k$. The

difference between T and t is that T denotes the set of state transition time points whereas t represents a particular state transition time instant. The set $T = \{t_1, t_2, t_3, \cdots, t_k, t_{k+1}, \cdots\}$ is neither given nor arbitrary; it can be found out using the methodology discussed in this Section. The state-transition time delay τ_k is a function of the previous state transition time t_k, the corresponding state $X(t_k)$ and the control input at time t_k, $U(t_k)$.

3.1 Algebraic Representation of the proposed ABCN

The ABCN model of n nodes and m inputs consists of three structural units: two Boolean function blocks $(\mathcal{F}, \mathcal{H})$ consisting of n and p number of Boolean functions respectively, and the delay block consisting of n number of delays for n nodes $(\tau_k, k = 1, \cdots, n)$. Looking at the ABCN model as depicted in Figure 1, say at time $t = t_k$, the state is updated to a vector $X(t_k)$. Since $\mathcal{F}$ is assumed to be instantaneous and control inputs $(U(t_k))$ are applied without any delay, the vector $X^*(t_k)$ will take the value equal to $\mathcal{F}(U(t_k), X(t_k))$. Now, looking at Figure 1, we can say that the value is $X^*(t_k) = \mathcal{F}(U(t_k), X(t_k))$ before delay and after applying delay the value is $X(t_k)$ respectively. If these two Boolean vectors, $X^*(t_k)$ and $X(t_k)$, are identical, the ABCN enters a steady-state known as singleton attractor irrespective of the given control input sequence $U(t_k)$. Otherwise, these two vectors will be different with respect to some non-zero number of bit positions. Let $\tau = [\tau_1, \cdots, \tau_n]$ be the vector of delays for the genes (bits) $x_1, x_2, \cdots, x_n$ respectively. Assume $\lambda = [\lambda_1, \ldots, \lambda_n]$ be the index vector of the genes with ascending order of delays. Hence, $\tau_{\lambda_1} < \tau_{\lambda_2} < \cdots < \tau_{\lambda_n}$. The delays in the ABCN model, which are assumed to be the abstraction of the continuous times for the transcription and translation processes of different genes, are usually different [15]. Therefore, one needs to arrange the order of the genes in the vector $X(t_k)$ following λ such that $X_\lambda(t_k) = [x_{\lambda_1}(t_k - \tau_{\lambda_1}), \cdots, x_{\lambda_n}(t_k - \tau_{\lambda_n})]$ and assume $X^*_\lambda(t_k) = \mathcal{F}(U(t_k), X_\lambda(t_k))$. By comparing two state vectors, $X_\lambda(t_k)$ and $X^*_\lambda(t_k)$, we will obtain t_{k+1} and $X(t_{k+1})$. Let x_{λ_j} be the bit with lowest j such that $x_{\lambda_j}(t_k) \neq x^*_{\lambda_j}(t_k)$, then in time τ_{λ_j}, the value of $x^*_{\lambda_j}(t_k)$ propagates to $x_{\lambda_j}(t_k)$ and switches the value. Hence, $t_{k+1} = t_k + \tau_{\lambda_j}$ and $x_{\lambda_j}(t_{k+1}) = x^*_{\lambda_j}(t_k) = \neg\big[x_{\lambda_j}(t_k)\big]$. Only one bit (gene) having the minimum delay will update its value at a time, while all other bits retain their values. The objective is to obtain an algebraic formula for the computation of $\mathbf{X}(t_{k+1})$ and t_{k+1} in terms of $\mathbf{U}(t_k)$, $\mathbf{X}(t_k)$ and t_k. The manuscript presents a generalized approach for algebraic formulation of the proposed ABCN model considering the stochastic nature of biological networks and hence its delays.

Using the algebraic state-space formulation, $\mathbf{X}^*(t_k) = \mathrm{F}\mathbf{U}(t_k)\mathbf{X}(t_k)$, and $\mathbf{X}(t_{k+1})$ is the next state to be estimated. For the purpose of comparison between $X(t_k)$ and $X^*(t_k)$ that helps in estimating the next state, a bit-wise XOR operation is applied, and the non-zero bits of the output vector provide the locations of the bit mismatch. Hence, the output of the comparator in the algebraic form is given by

$$\begin{aligned}
\mathbf{X}^*(t_k) \oplus \mathbf{X}(t_k) &= \mathrm{M}_X\, \mathbf{X}^*(t_k)\mathbf{X}(t_k) \\
&= \mathrm{M}_X\, \mathrm{F}\mathbf{U}(t_k)\mathbf{X}(t_k)\mathbf{X}(t_k) \\
&= \mathrm{M}_X\, \mathrm{F}\mathbf{U}(t_k)\Phi_n\mathbf{X}(t_k) \\
&= \mathrm{M}_X\, \mathrm{F}\,(\mathrm{I}_{2^m} \otimes \Phi_n)\,\mathbf{U}(t_k)\mathbf{X}(t_k) \qquad (16)
\end{aligned}$$

where $\mathrm{M}_X \in \mathscr{L}_{2^n \times 2^{2n}}$, the structure matrix of bit-wise XOR for n bits [14], is given as follows:

$$\mathrm{M}_X = \mathrm{M}_x \Big[\prod_{i=1}^{n-1} (\mathrm{I}_{4^i} \otimes \mathrm{M}_x)(\mathrm{I}_{2^i} \otimes \mathrm{W}_{[2,2^i]}) \Big] \tag{17}$$

where $\mathrm{M}_x = \delta_2[2,1,1,2]$ is the structure matrix of 1-bit XOR operation.

From the output of comparator, we only consider the bit with the minimum delay for estimating the next state. Hence, in order to arrange the bits in the ascending order of delays, a permutation matrix ($\mathrm{P}_\lambda \in \mathscr{L}_{n\times n}$) that can shuffle the vector $X = [x_1, \cdots, x_n]$ into $X_\lambda = [x_{\lambda_1}, \cdots, x_{\lambda_n}]$ is required such that $X_\lambda = \mathrm{P}_\lambda X$ [14]. The matrix P_λ can be expressed as

$$\mathrm{P}_\lambda(i,j) = \delta_n[c_1, \ldots, c_n] = \begin{cases} 1, & \text{if } j = \lambda_i \\ 0, & \text{otherwise.} \end{cases} \tag{18}$$

The algebraic form of P_λ, $\mathcal{P}_\lambda \in \mathscr{L}_{2^n \times 2^n}$ [14], can be defined as

$$\mathcal{P}_\lambda = \prod_{i=n}^{1} \mathrm{W}_{[2,2^{c_i+\eta_i-1}]} \tag{19}$$

where the vector $\eta \in \mathbb{R}^n$ can be obtained as $\eta = \Big[\sum_{j=1}^{n} \mathrm{A}(i,j)\Big]^T$ from a matrix A given as

$$\mathrm{A}(i,j) = \begin{cases} 1, & \text{if } \lambda_{c_i} < \lambda_j \text{ and } c_i < j \\ 0, & \text{otherwise.} \end{cases}$$

Since only the non-zero bit of the comparator output with the minimal delay is required to obtain the next state of the ABCN, a priority encoder (E_n) as defined in [14] is also required to obtain the bit with minimal delay called as the highest-priority bit. The priority encoder converts the input in an algebraic form to an output in the Boolean vector form. The structure matrix of the priority encoder for n bits, $\mathrm{E}_n \in \mathscr{L}_{n\times 2^n}$, is given as

$$\mathrm{E}_n = \big[\underbrace{\delta_n^1 \cdots \delta_n^1}_{2^{n-1}\text{ times}} \underbrace{\delta_n^2 \cdots \delta_n^2}_{2^{n-2}\text{ times}} \cdots \underbrace{\delta_n^{n-1}\ \delta_n^{n-1}}_{2^1\text{ times}} \underbrace{\delta_n^n}_{2^0\text{ time}}\ 0\big]. \tag{20}$$

The purpose is to find out the minimum of the index j such that $x_{\lambda_j}(t_k) \neq x^*_{\lambda_j}(t_k)$. Now using the combination of priority encoder (E_n), permutation matrix (P_λ^{-1}) and its algebraic form ($\mathcal{P}_\lambda$), we can obtain a Boolean vector, say $\mu(t_k) \in \mathcal{B}_n$, that indicates the location of the bit in the present state that will be switched in the next state. Therefore,

$$\begin{aligned} \mu(t_k) &= \mathrm{P}_\lambda^{-1}\mathrm{E}_n\mathcal{P}_\lambda\mathrm{M}_X\mathbf{X}^*(t_k)\mathbf{X}(t_k) \\ &= \mathrm{P}_\lambda^{-1}\mathrm{E}_n\mathcal{P}_\lambda\mathrm{M}_X\mathrm{F}(\mathrm{I}_{2^m} \otimes \Phi_n)\mathbf{U}(t_k)\mathbf{X}(t_k) \end{aligned} \tag{21}$$

Since, the state updating strategy of the ABCN model considers switching of only one bit at a time, one can define n number of switching matrices for updating each bit. Based on the index λ_j obtained from $\mu(t_k)$, the desired switching matrix is chosen. Thus, suppose i^{th} bit in a state, say $\mathbf{X}$, switches its value, then the updated value of the state will be $\mathrm{S}_n^i\mathbf{X}$. The value of $\mathrm{S}_n^i \in \mathscr{L}_{2^n\times 2^n}$ can be expressed as

$$\mathrm{S}_n^i = \prod_{i=1}^{n} \left(\mathrm{I}_{2^{i-1}} \otimes \mathrm{M}_i\right) \tag{22}$$

where

$$\mathrm{M}_i = \begin{cases} \mathrm{M}_n = \delta_2[2,1], & \text{if } i^{\text{th}} \text{ bit is switched} \\ \mathrm{M}_b = \delta_2[1,2], & \text{otherwise.} \end{cases}$$

The algebraic form of the switching matrix for n bits in the state, $\mathrm{S_n} \in \mathscr{L}_{2^n\times n2^n}$, is given as $\mathrm{S_n} = [\mathrm{S}_n^1\ \mathrm{S}_n^2\ \cdots\ \mathrm{S}_n^n]$ [14].

Based on this premise, the following algebraic expression can be derived to describe the dynamics of the proposed ABCN model provided the system does not enter a steady-state (singleton attractor):

$$\begin{aligned}
\mathbf{X}(t_{k+1}) &= \mathrm{S_n}\,\mu(t_k)\,\mathbf{X}(t_k) \\
&= \mathrm{S_n}\left(\mathrm{P}_\lambda^{-1}\mathrm{E}_n\mathcal{P}_\lambda\mathrm{M}_X\mathrm{F}\left(\mathrm{I}_{2^m}\otimes\Phi_n\right)\mathbf{U}(t_k)\,\mathbf{X}(t_k)\right)\mathbf{X}(t_k) \\
&= \mathrm{S_n}\,\mathrm{P}_\lambda^{-1}\mathrm{E}_n\mathcal{P}_\lambda\mathrm{M}_X\mathrm{F}\left(\mathrm{I}_{2^m}\otimes\Phi_n\right)\mathbf{U}(t_k)\,\Phi_n\mathbf{X}(t_k) \\
&= \mathrm{S_n}\,\mathrm{P}_\lambda^{-1}\mathrm{E}_n\mathcal{P}_\lambda\mathrm{M}_X\mathrm{F}\left(\mathrm{I}_{2^m}\otimes\Phi_n\right)\left(\mathrm{I}_{2^m}\otimes\Phi_n\right)\mathbf{U}(t_k)\mathbf{X}(t_k) \\
&= \mathrm{S_n}\,\widehat{\mu}\,\mathbf{U}(t_k)\,\mathbf{X}(t_k) \\
&= \widehat{\mathrm{Z}}\,\mathbf{U}(t_k)\,\mathbf{X}(t_k)
\end{aligned} \tag{23}$$

where $\widehat{\mu} \in \mathscr{L}_{n2^n\times 2^{m+n}} = \mathrm{P}_\lambda^{-1}\,\mathrm{E}_n\,\mathcal{P}_\lambda\,\mathrm{M}_X\,\mathrm{F}\left(\mathrm{I}_{2^m}\otimes\Phi_n\right)\left(\mathrm{I}_{2^m}\otimes\Phi_n\right)$ and $\widehat{\mathrm{Z}} \in \mathscr{L}_{2^n\times 2^{m+n}} = \mathrm{S_n}\,\widehat{\mu}$. For any steady state, it is observed that $\mu(t_k) = [\underbrace{0\,0\,\cdots\,0}_{n}]^T$. Therefore, the network transition matrix of the proposed ABCN model for the given delays can be modified as follows:

$$\mathrm{Z} = \mathrm{I}_{2^n\times 2^n}\,\mathbf{1}_{1\times 2^m} + \left(\mathrm{S_n} - \mathrm{I}_{2^n\times 2^{m+n}}\,\mathbf{1}_{2^m\times n)}\right)\widehat{\mu} \tag{24}$$

The proposed ABCN model (14)-(15) can now be represented in the following algebraic form:

$$\begin{cases} \mathbf{X}(t_{k+1}) &= \mathrm{Z}\mathbf{U}(t_k)\,\mathbf{X}(t_k) \\ \mathbf{Y}(t_k) &= \mathrm{H}\mathbf{X}^*(t_k) \\ \mathbf{X}^*(t_k) &= \mathrm{F}\mathbf{U}(t_k)\,\mathbf{X}(t_k) \end{cases} \tag{25}$$

Similarly, for the given present state $\mathbf{X}(t_k)$ and control input $\mathbf{U}(t_k)$ at time t_k, the next state-transition time point can be obtained as follows.

$$t_{k+1} = t_k + \tau\,\mu(t_k)$$

$$= t_k + \tau\left(\mathrm{P}_\lambda^{-1}\mathrm{E}_n\mathcal{P}_\lambda\mathrm{M}_X\mathrm{F}(\mathrm{I}_{2^m}\otimes\Phi_n)\mathbf{U}(t_k)\mathbf{X}(t_k)\right)$$
$$= t_k + \mathrm{G}\,\mathbf{U}(t_k)\,\mathbf{X}(t_k) \tag{26}$$

where the vector $\mathrm{G}\in\mathcal{R}_{1\times 2^{m+n}}$ represents the sequence of time delays between two consecutive states and can be defined as follows

$$\mathrm{G} = \tau\,\mathrm{P}_\lambda^{-1}\,\mathrm{E}_n\,\mathcal{P}_\lambda\,\mathrm{M}_X\,\mathrm{F}\,(\mathrm{I}_{2^m}\otimes\Phi_n). \tag{27}$$

3.2 Steady States and Stability Analysis

Consider the proposed ABCN (14) with its algebraic form (25). We will analyze the steady-states, and stability of the model for a given input control sequence.

Considering the transition matrix $\mathrm{Z}\in\mathscr{L}_{2^n\times 2^{m+n}}$ and $\mathrm{Z}\,\mathbf{U}(t)\in\mathscr{L}_{2^n\times 2^n}$, one can divide Z into 2^m equal parts as $\mathrm{Z}=[\mathrm{Z}_1,\mathrm{Z}_2,\ldots,\mathrm{Z}_{2^m}]$ where $\mathrm{Z}_i\in\mathscr{L}_{2^n\times 2^n}, i\in 1,\ldots,2^m$. When the input control sequence is given, ABCN model (14) becomes a ABN with no control inputs, i.e., for each given $\mathbf{U}(t)\in\Delta_{2^m}$, $\mathrm{Z}\,\mathbf{U}(t_k)$ in (25) equals $\mathrm{Z}_{\mathbf{U}(t_k)}$, where $\mathrm{Z}_{\mathbf{U}(t_k)}=\mathrm{Z}_i$.

A complete analysis of the steady-states (i.e., singleton attractors and cyclic attractors) of BNs, including the formula for the number of attractors and calculating attractors, can be found in Definition V.3, Theorem V.4, and Proposition V.5 of [5]. This basic formulation will be used for finding the steady states of the proposed ABCN model.

Definition 3.1. *A singleton attractor is a state $\mathbf{X}_0\in\Delta_{2^n}$ for which $\mathbf{X}(t;\mathbf{X}_0)=\mathbf{X}_0$ for all $t\geq 1$. A sequence $\{\mathbf{X}_0,\mathbf{X}_1=\mathrm{Z}_{\mathbf{U}(t)}\mathbf{X}_0,\mathbf{X}_2=\mathrm{Z}^2_{\mathbf{U}(t)}\mathbf{X}_0,\cdots,\mathbf{X}_k=\mathrm{Z}^k_{\mathbf{U}(t)}\mathbf{X}_0=\mathbf{X}_0\}$, with $\mathbf{X}_j:=\mathbf{X}(j;\mathbf{X}_k),\mathbf{X}_i\neq\mathbf{X}_j,0\leq i<j<k$, is called a cyclic attractor of length k.*

Theorem 3.1. *For each given control input sequence $\mathbf{U}(t)\in\Delta_{2^m}$*

i. The number of singleton attractors, $N_1=Trace(\mathrm{Z}_{U(t)})$.

ii. The number of cyclic attractors of length s is given as,

$$N_s = \frac{Trace(\mathrm{Z}^s_{U(t)}) - \sum\limits_{k\in\mathscr{P}(s)} kN_k}{s},\quad 2\leq s\leq 2^n$$

where $\mathscr{P}(s)$ is the set of proper factors of s, i.e., $k\in\mathbb{Z}_+$, $k<s$, and $s/k\in\mathbb{Z}_+$.

A Boolean network is said to exhibit monostability (bistability) if it has exactly one (two) singleton attractor(s) and strict monostability (or strict bistability) if it does not have any other additional attractors. The stability analysis of the proposed ABCN model (14) having transition matrix $\mathrm{Z}\in\mathscr{L}_{2^n\times 2^{m+n}}$ for the given input control input $\mathbf{U}(t)\in\Delta_{2^m}$ is done as follows [16].

Definition 3.2.

i. monostable iff $Trace(\mathrm{Z}_{\mathbf{U}(t)})=1$;

ii. strictly monostable iff $Trace(\mathrm{Z}^k_{\mathbf{U}(t)})=1,\forall k=1,2,\cdots,2^n$;

iii. bistable iff $Trace(\mathrm{Z}_{\mathbf{U}(t)})=2$;

iv. strictly bistable iff $Trace(\mathrm{Z}^k_{\mathbf{U}(t)})=2,\forall k=1,2,\cdots,2^n$;

v. either strictly monostable or strictly bistable iff $Trace(\mathrm{Z}_{\mathbf{U}(t)})\leq 2$, and there is no cyclic attractor.

vi. neither monostable nor bistable iff $Trace(\mathrm{Z}_{\mathbf{U}(t)})>2$.

All the above stability conditions are easily verifiable via MATLAB.

4 RESULTS and DISCUSSION

4.1 An Illustrative Example

Consider the ABCN model of a GRN having three nodes and one binary control input whose dynamics can be expressed in the continuous-time logical domain as follows:

$$\begin{cases} x_1(t) &= \neg\big(x_1(t-\tau_1) \leftrightarrow x_2(t-\tau_2)\big) \\ x_2(t) &= \neg\big(x_2(t-\tau_2) \leftrightarrow x_3(t-\tau_3)\big) \\ x_3(t) &= u(t) \wedge x_1(t-\tau_1) \end{cases} \tag{28}$$

$$\begin{cases} y_1(t) &= x_1(t) \leftrightarrow x_2(t) \\ y_2(t) &= x_2(t) \wedge x_3(t) \end{cases} \tag{29}$$

where $\tau_1 = 0.4$ hr, $\tau_2 = 0.2$ hr, and $\tau_3 = 0.5$ hr, are the delays associated with the nodes x_1, x_2, and x_3 respectively.

Representing all the logical arguments in the vector form, i.e. $\mathbf{x_1}, \mathbf{x_2}, \mathbf{x_3}, \mathbf{u}, \mathbf{y_1}, \mathbf{y_2} \in \Delta_2$, (28) and (29) can be represented in the algebraic form as

$$\begin{cases} \mathbf{x}_1(t_k) &= \mathrm{M}_n\, \mathrm{M}_e\, \mathbf{x}_1(t_k-\tau_1)\, \mathbf{x}_2(t_k-\tau_2) \\ \mathbf{x}_2(t_k) &= \mathrm{M}_n\, \mathrm{M}_e\, \mathbf{x}_2(t_k-\tau_2)\, \mathbf{x}_3(t_k-\tau_3) \\ \mathbf{x}_3(t_k) &= \mathrm{M}_c\, \mathbf{u}(t_k)\, \mathbf{x}_1(t_k-\tau_1) \end{cases} \tag{30}$$

$$\begin{cases} \mathbf{y}_1(t_k) &= \mathrm{M}_e\, \mathbf{x}_1(t_k)\, \mathbf{x}_2(t_k) \\ \mathbf{y}_2(t_k) &= \mathrm{M}_c\, \mathbf{x}_2(t_k)\, \mathbf{x}_3(t_k) \end{cases} \tag{31}$$

where M_n, M_c, and M_e are the structure matrices of logical 'NOT', 'AND', and 'XNOR' operators respectively.

Setting $\mathbf{U} \in \Delta_2$, $\mathbf{Y}(t_k) = \ltimes_{j=1}^{2}\mathbf{y}_j(t_k) \in \Delta_{2^2}$, $\mathbf{X}^*(t_k) = \ltimes_{i=1}^{3}\mathbf{x}_i(t_k) \in \Delta_{2^3}$, and $\mathbf{X}(t_k) = \ltimes_{i=1}^{3}\mathbf{x}_i(t_k-\tau_i) \in \Delta_{2^3}$, we will have $\mathbf{X}^*(t_k) = \mathrm{F}\mathbf{U}(t_k)\mathbf{X}(t_k)$. The transition matrix $\mathrm{F} \in \mathscr{L}_{2^3\times 2^4}$ represents a synchronous Boolean control network model and can be obtained as $\mathrm{F} = \delta_8[7,5,1,3,4,2,6,8,8,6,2,4,4,2,6,8]$. The linear form of the ABCN model for the GRN (28)-(29) can be obtained as

$$\mathbf{X}(t_{k+1}) = \mathrm{Z}\mathbf{U}(t_k)\mathbf{X}(t_k) \tag{32}$$

$$\mathbf{Y}(t_k) = \mathrm{H}\mathbf{X}^*(t_k) \tag{33}$$

where Z is called the network transition matrix of the ABCN model (28)–(29). For the given set of delays, the network transition matrix $\mathrm{Z} \in \mathscr{L}_{2^3\times 2^4}$ and the output transition matrix $\mathrm{H} \in \mathscr{L}_{2^2\times 2^3}$ can be obtained using (24) and (13) respectively as follows: $\mathrm{Z} = \delta_8[3,6,1,3,7,2,5,8,3,6,1,4,7,2,5,8]$ and $\mathrm{H} = \delta_4[1,2,4,4,3,4,2,2]$.

The state transition diagrams for BCN and proposed ABCN models of the GRN (28) are shown in Fig. 2 and Fig. 3 respectively. In Fig. 2, it can be observed that (i) all state transitions need the same amount of time delay, and (ii) two or more bits (nodes) switch simultaneously in most of the state transitions, e.g., $[0,\underline{0},\underline{1}] \xrightarrow{U=1} [0,\underline{1},\underline{0}]$, $[\underline{0},\underline{1},\underline{1}] \xrightarrow{U=1} [\underline{1},\underline{0},\underline{0}]$, $[\underline{1},\underline{1},\underline{1}] \xrightarrow{U=0} [\underline{0},\underline{0},\underline{0}]$, $[1,\underline{0},\underline{1}] \xrightarrow{U=0} [1,\underline{1},\underline{0}]$, $[\underline{1},1,\underline{0}] \xrightarrow{U=0} [\underline{0},1,\underline{1}]$, and so on. However, in Fig. 3, it can be verified that (i) all state transitions need different time delays depending

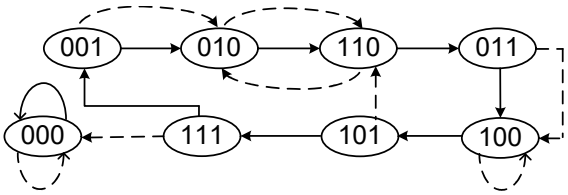

Fig. 2 The state transition diagram of the BCN model for the GRN (28). The solid (dashed) lines represent the transitions corresponding to the input $\mathbf{U} = 1$ ($\mathbf{U} = 0$). It is assumed that all state transitions need the same time duration of 1 hour.

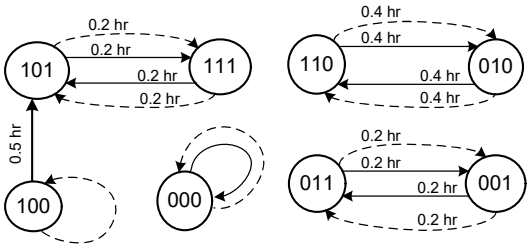

Fig. 3 The state transition diagram of proposed ABCN model for the GRN (28). The solid (dashed) lines represent the transitions corresponding to the input $\mathbf{U} = 1$ ($\mathbf{U} = 0$). The numerical value above the lines denotes the corresponding time delay associated with the state transition.

upon the node that updates its value, and (ii) only one bit (node) switches its value in each state transition, e.g., $[0,\underline{1},1] \xrightarrow[0.2\text{ hr}]{U=0/1} [0,\underline{0},1]$, $[\underline{1},1,0] \xrightarrow[0.4\text{ hr}]{U=0/1} [\underline{0},1,0]$, $[1,\underline{1},1] \xrightarrow[0.2\text{ hr}]{U=0/1} [1,\underline{0},1]$, $[1,0,\underline{0}] \xrightarrow[0.5\text{ hr}]{U=1} [1,0,\underline{1}]$, and so on. In addition, singleton attractors of the BCN model being the steady states are invariable in the proposed ABCN model, e.g., $[1,0,0] \xrightarrow{U=0} [1,0,0]$ and $[0,0,0] \xrightarrow{U=1/0} [0,0,0]$.

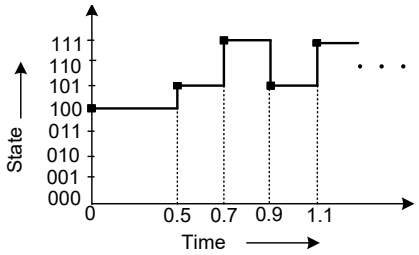

Fig. 4 The dynamics of the ABCN model for the GRN (28) assuming initial state to be $\mathbf{X}(0) = \delta_8^4 = [1\ 0\ 0]$ and control input $\mathbf{U} = 1$.

For a given initial state and the set of time delays, the sequence of state transition time delays (i.e., time delay between two consecutive states) appearing in the ABCN model of the GRN (28) can be obtained using (26) where the vector $\mathrm{G} \in \mathcal{R}_{1\times 2^4}$ is given as follows: $\mathrm{G} = [0.2,0.4,0.2,0.5,0.2,0.4,0.2,0,0.2,0.4,0.2,0,0.2,0.4,0.2,0]$. The dynamics of the ABCN

Table 1

	Details of attractors (Number, lengths, states)	
Control input (U)	BCN	ABCN
1	(i) 000 → 000 (ii) 111 → 001 → 010 → 011 → 100 → 101 → 111	(i) 000 → 000 (ii) 111 → 101 → 111 (iii) 110 → 010 → 110 (iv) 011 → 001 → 011
0	(i) 000 → 000 (ii) 100 → 100 (iii) 110 → 010 → 110	(i) 000 → 000 (ii) 100 → 100 (iii) 111 → 101 → 111 (iv) 110 → 010 → 110 (v) 011 → 001 → 011

model for the GRN (28) is shown in Fig. 4 assuming the initial state to be [1 0 0], i.e., $\mathbf{X}(0) = \delta_8^4$ and control input as $\mathbf{U} = 1$. The sequence of state transitions and the corresponding set of update time points can be obtained as $[1\,0\,0] \xrightarrow{\tau_3} [1\,0\,1] \xrightarrow{\tau_2} [1\,1\,1] \xrightarrow{\tau_2} [1\,0\,1] \xrightarrow{\tau_2} [1\,1\,1] \cdots$ and $\{0, 0.5, 0.7, 0.9, 1.1, \cdots\}$ respectively.

4.1.1 Steady-states and Stability Analysis of the GRN (28)

A comparison of the number and lengths of attractors between the BCN and ABCN model of the GRN (28) is provided in Table I. Irrespective of the updating principle, the given GRN (28) have one steady state in the presence of external control input and two steady states in the absence of control input. It can be verified that the steady states, represented by the singleton attractors, are not affected by the updating strategy thus ensuring the key dynamical features of the network unaltered. Hence, the GRN as given in (28) is a monostable system for $\mathbf{U}(t) = 1$ and a bistable system for $\mathbf{U}(t) = 0$. However, the set of cyclic attractors in the ABCN model are different from that of the BCN model as mentioned in Table 1.

4.2 Biological Example: NFκB apoptosis signaling pathways

4.2.1 Biological Background

Apoptosis (also known as programmed cell death) is an inevitable physiological process for all multicellular organisms to control cell proliferation and maintain tissue homeostasis. It is also important for successful removal of harmful, unnecessary or damaged cells from an organism. For the preservation of genome integrity and the maintenance of a healthy equilibrium between cell survival and cell death, appropriate apoptotic signaling is vital. Any kind of defect or malfunctioning in the apoptotic pathway leads to loss of control over cell growth and proliferation, resulting in cancer and other autoimmune diseases such as AIDS, infertility, inflammatory and neurodegenerative diseases [17, 18]. Hence, elucidating and understanding the molecular interactions responsible for apoptosis are essential for therapeutic applications [19, 20]. In mammalian cells, apoptosis can be initiated either by extrinsic signals via stimulation of death receptors at the cellular surface or intrinsic signals, such as DNA damage or growth factor withdrawal. We will briefly discuss the NFκB apoptosis signaling pathway in response to the stimulation of death receptors by cytokine tumour necrosis factor α (TNF) in the cell. The TNF-mediated apoptosis process is composed of two contrary pathways: the

pro-apoptotic caspase cascade and the anti-apoptotic NFκB-IκB-IAP pathway. A schematic diagram of the NFκB apoptosis signaling pathway in response to TNF is shown in Fig. 5.

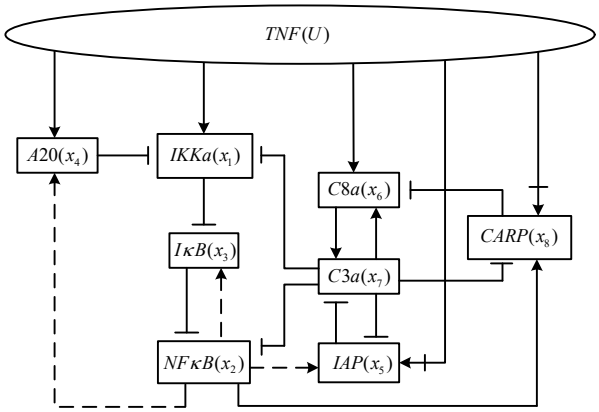

Fig. 5 A schematic diagram of the NFκB apoptosis signaling pathway in response to TNF signal. The solid lines represent faster biological interactions and dashed lines represent slow transcriptional interactions. An arrow represents activation (positive regulation) whereas a vertical/horizontal line represents inhibition (negative regulation) and an arrow with a line represents both activation and inhibition. The letter "a" juxtaposed to a variable name denotes its active form.

The molecular dynamics of the pathway is as follows. Inhibitor of NFκB (IκB) acts by binding to NFκB molecules and thus preventing their transcriptional activity. In normal cell types, NF-κB and IκB complexes are retained in the cytoplasm. In the first step, the TNF stimulation activates the proteins IκB kinases (IKKs) and active IKK (IKKa) phosphorylates the NF-κB-IκB complex. This results in the degradation of IκB and thus IκB releases NFκB. Now, the NF-κB being active is translocated freely into the nucleus where it activates the transcription of its own inhibitor (IκB) as well as other pro- and anti-apoptotic genes/proteins such as A20 (a protein regulating IKK activity), IAP (inhibitor of apoptosis protein), and CARP (caspase-8 and -10-associated RING proteins). Transcription of IκB generates a negative feedback loop in the NFκB signaling pathway, which leads to the oscillatory behaviour in NFκB and IκB concentrations. A20 can directly inactivate IKK and serves as a negative feedback mechanism to inhibit the survival pathway. In the second step, after certain delay, TNF activates the initiator caspase 8 (C8a) initiating the apoptotic process. As a result of the signaling cascade, effector caspase 3 is also activated (C3a). IAP is the most significant regulator of apoptosis whose primary function is to inhibit the activity of the caspase cascade. IAP inhibits caspase-3 and CARP inhibits caspase 8, preventing the triggering of apoptosis.

These two pathways form a complex gene regulatory network whose dynamics decides between cell survival or apoptosis. In order to gain an in-depth knowledge of the role of NFκB and its target genes/proteins in the regulation of cell survival and apoptosis, various mathematical models [21–23] and discrete (Boolean) models [24–27] of the NF-κB signaling pathway have been developed. However, no ABCN model for NFκB apoptosis signaling pathway incorporating different delays of the nodes has been developed till date. Therefore, the present manuscript proposed an ABCN model and introduced a method for its algebraic

formulation for contributing towards a better understanding of the dynamics resulting from NFκB apoptosis.

In this manuscript, the Boolean regulatory function for each of the nodes in the NFκB apoptosis signaling pathway is obtained from the Boolean model developed by Tournier and Chaves [24, 28]. The proposed model considers a single Boolean input, $U(t)$, corresponding to the stimulation of death receptors by TNF in the cell, eight Boolean state-variables $x_1(t), x_2(t), x_3(t), \cdots, x_8(t)$ representing the activity/inactivity at time t of eight different genes/proteins: IKKa, NFκB, IκB, A20a, IAP, C8a, C3a, and CARP, respectively and six output variables $y_1(t), y_2(t), \cdots, y_6(t)$ corresponding to NFκB, IκB, IAP, C8a, C3a, and CARP, respectively. The logical dynamics of the proposed ABCN model for NF-κB apoptosis signaling pathway can be expressed as follows:

$$\begin{cases} x_1(t) &= u(t) \wedge \neg x_4(t-\tau_4) \wedge \neg x_7(t-\tau_7) \\ x_2(t) &= \neg x_3(t-\tau_3) \wedge \neg x_7(t-\tau_7) \\ x_3(t) &= \neg x_1(t-\tau_1) \vee x_2(t-\tau_2) \\ x_4(t) &= u(t) \wedge x_2(t-\tau_2) \\ x_5(t) &= \Big[u(t) \wedge \big(x_2(t-\tau_2) \wedge \neg x_7(t-\tau_7)\big)\Big] \vee \\ & \quad \Big[\neg u(t) \wedge \big(x_2(t-\tau_2) \vee \neg x_7(t-\tau_7)\big)\Big] \\ x_6(t) &= \big(u(t) \vee x_7(t-\tau_7)\big) \wedge \neg x_8(t-\tau_8) \\ x_7(t) &= \neg x_5(t-\tau_5) \wedge x_6(t-\tau_6) \\ x_8(t) &= \Big[u(t) \wedge \big(x_2(t-\tau_2) \wedge \neg x_7(t-\tau_7)\big)\Big] \vee \\ & \quad \Big[\neg u(t) \wedge \big(x_2(t-\tau_2) \vee \neg x_7(t-\tau_7)\big)\Big] \end{cases} \tag{34}$$

$$\begin{cases} y_1(t) &= \neg x_3(t) \wedge \neg x_7(t) \\ y_2(t) &= \neg x_1(t) \vee x_2(t) \\ y_3(t) &= x_2(t) \wedge \neg x_7(t) \\ y_4(t) &= x_7(t) \wedge \neg x_8(t) \\ y_5(t) &= \neg x_5(t) \wedge x_6(t) \\ y_6(t) &= x_2(t) \wedge \neg x_7(t) \end{cases} \tag{35}$$

where $\tau_i, i = 1, 2, \cdots, 8$ are the delays associated with nodes $x_i, i = 1, 2, \cdots, 8$. From the existing literature based on experiments of NF-κB pathway, the ascending order of delays for the nodes in the pathway is found to be $\tau_1 < \tau_2 < \tau_3 < \tau_4 < \tau_5 < \tau_6 < \tau_7 < \tau_8$ [29]. The delay in hours associated with the nodes are assumed to be as follows: $\tau_1 = 0.016, \tau_2 = 0.05, \tau_3 = 0.17, \tau_4 = 0.25, \tau_5 = 0.4167 \equiv 0.42, \tau_6 = 0.43, \tau_7 = 0.45, \tau_8 = 0.47$.

The state of the ABCN model for NFκB apoptosis signaling pathway at time t_k is given as $\big[x_1(t_k), x_2(t_k), \ldots, x_8(t_k)\big]$. The MATLAB simulation result for the logical dynamics of the NFκB apoptosis signaling pathway in response to the TNF signal is shown in Fig. 6. For simulating the dynamics of NFκB pathway, the initial condition of nodes in the pathway is chosen to be $[0,0,1,0,0,0,0,0]$ because the relationship between NFκB and IκB is 'logical NOT' and initially the concentration level of NFκB is very low. As shown in the simulation result for temporal dynamics, all the nodes start oscillating in response to the TNF signal and after some time stabilize to the steady state ([0, 0, 1, 0, 0, 1, 1, 0]) which depicts an apoptotic steady state. After removal of the TNF signal, this apoptotic steady-state also continues.

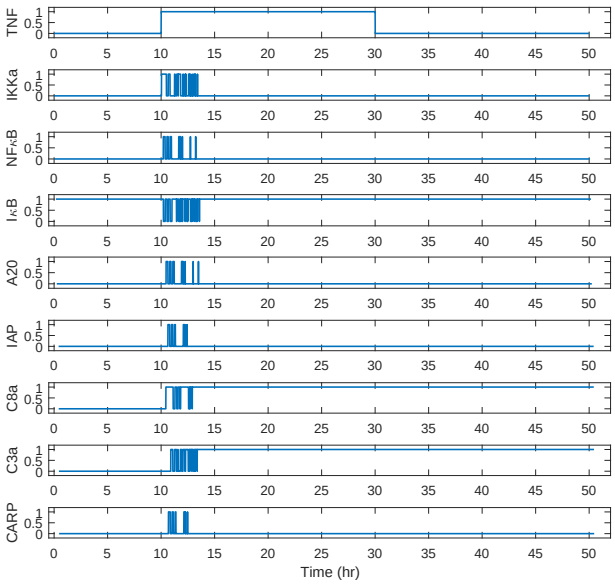

Fig. 6 The simulation result for the logical dynamics of the NFκB apoptosis signaling pathway showing cell death (apoptotic) steady state. The dynamics of all genes/proteins are simulated from different time instances equivalent to their corresponding delay values.

Representing all the logical arguments in the vector form, i.e. $\mathbf{x_1}, \mathbf{x_2}, \cdots, \mathbf{x_8}, \mathbf{u}\ \mathbf{y_1}, \cdots, \mathbf{y_6} \in \Delta_2$, the logical expressions in (34) and (35) can be expressed in the form of algebraic equations as follows

$$\begin{cases} \mathbf{x}_1(t_k) = \mathrm{M}_c\ \mathbf{u}(t_k)\ \mathrm{M}_c\ \mathrm{M}_n\ \mathbf{x}_4(t_k-\tau_4)\ \mathrm{M}_n\ \mathbf{x}_7(t_k-\tau_7) \\ \mathbf{x}_2(t_k) = \mathrm{M}_c\ \mathrm{M}_n\ \mathbf{x}_3(t_k-\tau_3)\ \mathrm{M}_n\ \mathbf{x}_7(t_k-\tau_7) \\ \mathbf{x}_3(t_k) = \mathrm{M}_d\ \mathrm{M}_n\ \mathbf{x}_1(t_k-\tau_1)\ \mathbf{x}_2(t_k-\tau_2) \\ \mathbf{x}_4(t_k) = \mathrm{M}_c\ \mathbf{u}(t_k)\ \mathbf{x}_2(t_k-\tau_2) \\ \mathbf{x}_5(t_k) = \mathrm{M}_d\ \mathrm{M}_c\ \mathbf{u}(t_k)\ \mathrm{M}_c\ \mathbf{x}_2(t_k-\tau_2)\ \mathrm{M}_n\ \mathbf{x}_7(t_k-\tau_7) \\ \qquad\quad \mathrm{M}_c\ \mathrm{M}_n\ \mathbf{u}(t_k)\ \mathrm{M}_d\ \mathbf{x}_2(t_k-\tau_2)\ \mathrm{M}_n\ \mathbf{x}_7(t_k-\tau_7) \\ \mathbf{x}_6(t_k) = \mathrm{M}_c\ \mathrm{M}_d\ \mathbf{u}(t_k)\ \mathbf{x}_7(t_k-\tau_7)\ \mathrm{M}_n\ \mathbf{x}_8(t_k-\tau_8) \\ \mathbf{x}_7(t_k) = \mathrm{M}_c\ \mathrm{M}_n\ \mathbf{x}_5(t_k-\tau_5)\ \mathbf{x}_6(t_k-\tau_6) \\ \mathbf{x}_8(t_k) = \mathrm{M}_d\ \mathrm{M}_c\ \mathbf{u}(t_k)\ \mathrm{M}_c\ \mathbf{x}_2(t_k-\tau_2)\ \mathrm{M}_n\ \mathbf{x}_7(t_k-\tau_7) \\ \qquad\quad \mathrm{M}_c\ \mathrm{M}_n\ \mathbf{u}(t_k)\ \mathrm{M}_d\ \mathbf{x}_2(t_k-\tau_2)\ \mathrm{M}_n\ \mathbf{x}_7(t_k-\tau_7) \end{cases} \tag{36}$$

$$\begin{cases} \mathbf{y}_1(t_k) = \mathrm{M}_c\ \mathrm{M}_n\ \mathbf{x}_3(t_k)\ \mathrm{M}_n\ \mathbf{x}_7(t_k) \\ \mathbf{y}_2(t_k) = \mathrm{M}_d\ \mathrm{M}_n\ \mathbf{x}_1(t_k)\ \mathbf{x}_2(t_k) \\ \mathbf{y}_3(t_k) = \mathrm{M}_c\ \mathbf{x}_2(t_k)\ \mathrm{M}_n\ \mathbf{x}_7(t_k) \\ \mathbf{y}_4(t_k) = \mathrm{M}_c\ \mathbf{x}_7(t_k)\ \mathrm{M}_n\ \mathbf{x}_8(t_k) \\ \mathbf{y}_5(t_k) = \mathrm{M}_c\ \mathrm{M}_n\ \mathbf{x}_5(t_k)\ \mathbf{x}_6(t_k) \\ \mathbf{y}_6(t_k) = \mathrm{M}_c\ \mathbf{x}_2(t_k)\ \mathrm{M}_n\ \mathbf{x}_7(t_k) \end{cases} \tag{37}$$

For algebraic representation of the ABCN model for NFκB apoptosis signaling pathway, let us define $\mathbf{U}(t_k) \in \Delta$, $\mathbf{X}(t_k) = \mathbf{x}_1(t_k-\tau_1)\mathbf{x}_2(t_k-\tau_2)\mathbf{x}_3(t_k-\tau_3)\cdots\mathbf{x}_8(t_k-\tau_8)$, $\mathbf{Y}(t_k) = \ltimes_{j=1}^{6}\mathbf{y}_j(t_k) \in \Delta_{2^6}$ and $\mathbf{X}^*(t_k) = \mathbf{x}_1(t_k)\mathbf{x}_2(t_k)\cdots\mathbf{x}_8(t_k) = \mathrm{F}\mathbf{U}(t_k)\mathbf{X}(t_k)$ where $\mathrm{F} \in \mathscr{L}_{256\times512}$, called the network transition matrix of the BCN model of the NFκB apoptosis signaling

pathway, can be obtained using (12) as follows

$$\begin{aligned} \mathrm{F} = \delta_{256}[&208,204,199,195,208,204,199,195,206,202,\\ &197,193,208,204,199,195,208,204,71,67,\\ &208,204,71,67,206,202,69,65,208,204,\\ &71,67,208,204,135,131,208,204,135,131,\\ &\vdots\\ &151,151,222,218,149,149,224,220,151,151] \end{aligned} \tag{38}$$

From the given set of delays, the vector representing the sequence of ascending order of delays is given as $\lambda = [1\ 2\ 3\ 4\ 5\ 6\ 7\ 8]$. Now, the algebraic representation of the ABCN model of NFκB apoptosis signaling pathway (34)-(35) can be written as

$$\mathbf{X}(t_{k+1}) = \mathrm{Z}\mathbf{U}(t_k)\mathbf{X}(t_k) \tag{39}$$

$$\mathbf{Y}(t_k) = \mathrm{H}\mathbf{X}^*(t_k) \tag{40}$$

where $\mathrm{Z} \in \mathscr{L}_{2^8\times 2^9}$, called the network transition matrix of the ABCN model of (34), can be obtained using (24) as

$$\begin{aligned} \mathrm{Z} = \delta_{256}[&129,130,131,132,\cdots,144,145,146,83,84,149,150,\\ &87,88,153,154,91,92,157,158,95,96,161,162,163,\\ &164,\cdots,176,177,178,19,20,181,182,23,24,185,186,\\ &27,28,189,190,31,32,193,194,195,\cdots,208,209,210,\\ &115,116,213,214,119,120,217,218,123,124,221,222,\\ &127,128,225,226,227,\cdots,240,241,242,51,52,\cdots\\ &\vdots\\ &214,183,184,217,218,187,188,221,222,191,192] \end{aligned} \tag{41}$$

and $\mathrm{H} \in \mathscr{L}_{2^6\times 2^8}$, the output transition matrix can be obtained using (13) as

$$\begin{aligned} \mathrm{H} = \delta_{64}[&48,44,39,39,48,44,39,39,46,42,37,37,\\ &48,44,39,39,48,44,39,39,48,44,39,39,\\ &46,42,37,37,48,44,7,7,48,44,7,7,\\ &46,42,5,5,48,44,7,7,48,44,7,7,\\ &\vdots\\ &48,44,16,16,48,44,16,16,48,44,16,16,\\ &48,44,16,16,46,42,14,14,48,44,16,16]. \end{aligned} \tag{42}$$

The state transition time delays in the proposed ABCN model can be obtained using (26) where the vector $G \in \mathcal{R}_{1\times 2^9}$ is given as follows using (27): $G = [0.016, 0.016, \ldots, (18\ \ times), 0.016, 0.05, 0.05, 0.016, 0.016,$
$0.05, 0.05, 0.016, 0.016, 0.05, 0.05, 0.016, 0.016, 0.05, 0.05, 0.016,$
$0.016, 0.016, \cdots, (18\ \ times), 0.17, 0.17, 0.016, 0.016, 0.17, 0.17,$
$0.016, 0.016, 0.17, 0.17, \cdots, 0.05, 0.05, 0.17, 0.17, 0.05, 0.05,$
$0.17, 0.17, 0.05, 0.05, 0.17, 0.17, 0.05, 0.05]$.

4.2.2 Steady-state and Stability Analysis of the NFκB apoptosis-pathway

The dynamics of BCN model for the NFκB apoptosis-pathway comprises one singleton attractor, (i) 00100110 $\rightarrow$ 00100110, and one cyclic attractor of length three, in the presence of TNF, such as (ii) 11100100 $\rightarrow$ 10111111 $\rightarrow$ 00000000 $\rightarrow$ 11100100. In the absence of TNF, it gives two singleton attractors, (i) 00101001 $\rightarrow$ 00101001 and (ii) 00100110 $\rightarrow$ 00100110 and no cyclic attractors.

The ABCN dynamics of the NFκB apoptosis-pathway provides two singleton attractors in the absence of TNF, same as that of the BCN model, i.e., (i) 00101001 $\rightarrow$ 00101001, and (ii) 00100110 $\rightarrow$ 00100110. In the presence of TNF, it comprises one singleton attractor, (i) 00100110 $\rightarrow$ 00100110, and eight cyclic attractors (oscillatory states), each of length 4, as follows:
(ii) 11100001 $\rightarrow$ 10100001 $\rightarrow$ 10000001 $\rightarrow$ 11000001 $\rightarrow$ 11100001,
(iii) 11100000 $\rightarrow$ 10100000 $\rightarrow$ 10000000 $\rightarrow$ 11000000 $\rightarrow$ 11100000,
(iv) 11101001 $\rightarrow$ 10101001 $\rightarrow$ 10001001 $\rightarrow$ 11001001 $\rightarrow$ 11101001,
(v) 11101000 $\rightarrow$ 10101000 $\rightarrow$ 10001000 $\rightarrow$ 11001000 $\rightarrow$ 11101000,
(vi) 11101101 $\rightarrow$ 10101101 $\rightarrow$ 10001101 $\rightarrow$ 11001101 $\rightarrow$ 11101101,
(vii) 11101100 $\rightarrow$ 10101100 $\rightarrow$ 10001100 $\rightarrow$ 11001100 $\rightarrow$ 11101100,
(viii) 11100101 $\rightarrow$ 10100101 $\rightarrow$ 10000101 $\rightarrow$ 11000101 $\rightarrow$ 11100101,
and (ix) 11100100 $\rightarrow$ 10100100 $\rightarrow$ 10000100 $\rightarrow$ 11000100 $\rightarrow$ 11100100.

In these eight oscillatory states, nodes NFκB and IκB oscillates between ON and OFF, node Ikka remains ON, C3a and A20 remain OFF, and CARP remain either ON or OFF while IAP and C8a value changes. Hence, depending upon the values of IAP and C8a, eight oscillatory states can be grouped into four categories as given in the Table 2. According to the sequence of occurrence of the states, the biological significance of all the states can be described as follows. The category (a), which is a combination of oscillatory states (ii) and (iii), where the NFκB signal stays on but neither IAP has been activated nor cell death has been initiated; category (b), a combination of oscillatory states (iv) and (v) which represents the early NFκB signaling that directs IAP-mediated cell-survival but does not initiate cell-death; category (c) signifies the onset of cell death (apoptosis) process counteracted by a sustained ON signal of NFκB signaling; and category (d) represents that the cell death process is still continuing even if the NFκB signal is ON that implies the cell death process is dominating the on-going NFκB signaling.

Therefore, it is observed that, in the absence of TNF stimulation, the system enters a steady state corresponding to either the cell survival or apoptosis. This represents that cells survive (and grow) and also may die of natural death independent of TNF. In case of apoptosis, IκB is bound to NFκB, thus inhibiting the expression of target genes/proteins and resulting in cell apoptosis. The state of cell survival represents the absence of caspase-3 and -8 due to

Table 2 Four Categories of Oscillatory States

	x_1	x_2	x_3	x_4	x_5	x_6	x_7	x_8
(a)	1	*	*	0	0	0	0	1/0
(b)	1	*	*	0	1	0	0	1/0
(c)	1	*	*	0	1	1	0	1/0
(d)	1	*	*	0	0	1	0	1/0

* represents the node oscillates between 0 and 1

stable expression of IAP and CARP. In the presence of TNF stimulation, IκB, NFκB, and its target genes/proteins exhibit oscillatory dynamics [30]. This oscillatory behaviour initially protects cells from death and is succeeded by a late-acting cell death signalling. Hence, in the absence of TNF, the NFκB apoptosis network is a strictly bistable system as observed by two singleton attractors and the presence of TNF makes the network a monostable system as observed by one singleton attractor for both the BCN and ABCN models.

5 CONCLUSION

A method for algebraic formulation of ABCN model having different node-updating time delays for GRNs is proposed in the manuscript. Two examples are provided to show the efficiency of the proposed algebraic approach. It is observed that an ABCN model depicts more detailed temporal dynamics of a biological network than a BCN model. The results obtained from the ABCN model of the NFκB apoptosis pathway matches with the experimental observations of the pathway such as the steady states and oscillatory states. By incorporating asynchronism at the node level, the model enables independent node updates, thereby fulfilling the fundamental requirement for developing effective therapeutic intervention strategies.

The proposed method is a generalized approach to any biological network provided the time delays for activation or inhibition of the genes are known. However, in some cases, the exact time delays of nodes in a GRN may not be available; hence a set consisting of the most probable updating periods for each node in the network can be estimated. In such cases, a probabilistic ABCN model may be developed as an important future work. Analysis of controllability and designing optimal control strategies for the proposed ABCN model are also interesting research threads that may be pursued. The NF-κB signaling pathways and its dynamics serve as a diagnostic and prognostic network for emerging themes arising from this work.

Data availability

The datasets generated and analyzed during the current study are included in this submitted article.

Code availability

The underlying code for this study is not publicly available but may be made available to qualified researchers on reasonable request from the corresponding author.

Acknowledgements

This research work was funded by the National Post-Doctoral Fellowship (PDF/2019/001114), Science and Engineering Research Board, Department of Science and Technology, India.

Conflicts of interest

All authors declare no financial or non-financial competing interests.

Author Contributions

H.D. conceived the project, developed methodology, implemented the mathematical model, performed the simulations and comparative analyses, and wrote the original draft. J.G. contributed to the validation of results, formal analysis, supervision, and manuscript review and editing. S.B. contributed to the biological pathway analysis, validation of results, and manuscript review and editing. N.B.P. provided the comparative analysis, supervision, project administration, and manuscript review and editing. All authors read and approved the final manuscript.

References

[1] Chai, L.E., Loh, S.K., Low, S.T., Mohamad, M.S., Deris, S., Zakaria, Z.: A review on the computational approaches for gene regulatory network construction. Computers in Biology and Medicine **48**, 55–65 (2014)

[2] Kauffman, S.A.: Metabolic stability and epigenesis in randomly constructed genetic nets. Journal of Theoretical Biology **22**(3), 437–467 (1969)

[3] Alon, U.: An Introduction to Systems Biology: Design Principles of Biological Circuits. Chapman and Hall/CRC, ??? (2006)

[4] Thomas, R.: Regulatory networks seen as asynchronous automata: a logical description. Journal of Theoretical Biology **153**(1), 1–23 (1991)

[5] Cheng, D., Qi, H.: A linear representation of dynamics of Boolean networks. IEEE Transactions on Automatic Control **55**(10), 2251–2258 (2010)

[6] Cheng, D., Qi, H., Li, Z.: Analysis and Control of Boolean Networks: A Semi-tensor Product Approach. Springer, Berlin, Heidelberg (2011)

[7] Cheng, D., Qi, H., Liu, T., Wang, Y.: A note on observability of Boolean control networks. Systems & Control Letters **87**, 76–82 (2016)

[8] Li, Y., Li, H.: Controllability and stabilization of periodic switched Boolean control networks with application to asynchronous updating. Nonlinear Analysis: Hybrid Systems **41**, 101054 (2021)

[9] Yang, X., Li, H.: Reachability, controllability, and stabilization of Boolean control networks with stochastic function perturbations. IEEE Transactions on Systems, Man, and Cybernetics: Systems **53**(2), 1198–1208 (2023)

[10] Li, F., Sun, J.: Controllability of Boolean control networks with time delays in states. Automatica **47**(3), 603–607 (2011)

[11] Han, M., Liu, Y., Tu, Y.: Controllability of Boolean control networks with time delays both in states and inputs. Neurocomputing **129**, 467–475 (2014)

[12] Lu, J., Zhong, J., Ho, D.W., Tang, Y., Cao, J.: On controllability of delayed Boolean control networks. SIAM Journal on Control and Optimization **54**(2), 475–494 (2016)

[13] Zhang, H., Su, X., Xu, L., Yan, P.: Controllability of delayed generalized asynchronous Boolean control networks under disturbances. Nonlinear Analysis: Hybrid Systems **54**, 101528 (2024)

[14] Das, H., Deshpande, A., Layek, R.K.: A linear formulation of asynchronous Boolean networks. IEEE Control Systems Letters **3**(2), 284–289 (2018)

[15] Das, H., Layek, R.K.: Estimation of delays in generalized asynchronous Boolean networks. Molecular BioSystems **12**(10), 3098–3110 (2016)

[16] Chen, S., Wu, Y., Macauley, M., Sun, X.-M.: Monostability and bistability of Boolean networks using semitensor products. IEEE Transactions on Control of Network Systems **6**(4), 1379–1390 (2018)

[17] Dresselhaus, E.C., Meffert, M.K.: Cellular specificity of NF-kB function in the nervous system. Frontiers in Immunology **10**, 1043 (2019)

[18] Zinatizadeh, M.R., Schock, B., Chalbatani, G.M., Zarandi, P.K., Jalali, S.A., Miri, S.R.: The nuclear factor kappa B (NF-kB) signaling in cancer development and immune diseases. Genes & Diseases **8**(3), 287–297 (2021)

[19] Carneiro, B.A., El-Deiry, W.S.: Targeting apoptosis in cancer therapy. Nature Reviews Clinical Oncology **17**(7), 395–417 (2020)

[20] Yu, H., Lin, L., Zhang, Z., Zhang, H., Hu, H.: Targeting NF-kB pathway for the therapy of diseases: mechanism and clinical study. Signal Transduction and Targeted Therapy **5**(1), 1–23 (2020)

[21] Koh, G., Lee, D.-Y.: Mathematical modeling and sensitivity analysis of the integrated TNFa-mediated apoptotic pathway for identifying key regulators. Computers in Biology and Medicine **41**(7), 512–528 (2011)

[22] Basak, S., Behar, M., Hoffmann, A.: Lessons from mathematically modeling the NF-kB pathway. Immunological Reviews **246**(1), 221–238 (2012)

[23] Williams, R.A., Timmis, J., Qwarnstrom, E.E.: Computational models of the NF-kB signalling pathway. Computation **2**(4), 131–158 (2014)

[24] Tournier, L., Chaves, M.: Uncovering operational interactions in genetic networks using asynchronous Boolean dynamics. Journal of Theoretical Biology **260**(2), 196–209 (2009)

[25] Schlatter, R., Schmich, K., Avalos Vizcarra, I., Scheurich, P., Sauter, T., Borner, C., Ederer, M., Merfort, I., Sawodny, O.: ON/OFF and beyond—a Boolean model of apoptosis. PLoS Computational Biology **5**(12), 1000595 (2009)

[26] Mai, Z., Liu, H.: Boolean network-based analysis of the apoptosis network: irreversible apoptosis and stable surviving. Journal of Theoretical Biology **259**(4), 760–769 (2009)

[27] Calzone, L., Tournier, L., Fourquet, S., Thieffry, D., Zhivotovsky, B., Barillot, E., Zinovyev, A.: Mathematical modelling of cell-fate decision in response to death receptor engagement. PLoS Computational Biology **6**(3), 1000702 (2010)

[28] Chaves, M., Eissing, T., Allgower, F.: Regulation of apoptosis via the NF-kB pathway: modeling and analysis. In: Dynamics on and of Complex Networks, pp. 19–33. Springer, ??? (2009)

[29] Shokhirev, M.N., Almaden, J., Davis-Turak, J., Birnbaum, H.A., Russell, T.M., Vargas, J.A., Hoffmann, A.: A multi-scale approach reveals that NF-kB crel enforces a B-cell decision to divide. Molecular Systems Biology **11**(2), 783 (2015)

[30] Nelson, D., Ihekwaba, A., Elliott, M., Johnson, J., Gibney, C., Foreman, B., Nelson, G., See, V., Horton, C., Spiller, D., *et al.*: Oscillations in NF-kB signaling control the dynamics of gene expression. Science **306**(5696), 704–708 (2004)