Research Square

Preprints are preliminary reports that have not undergone peer review.
They should not be considered conclusive, used to inform clinical practice,
or referenced by the media as validated information.

A New Increment Sample Ejector to Rescue Tree-Ring Samples

Zulfiyor Bakhtiyorov

zb308@cam.ac.uk

University of Cambridge

Heli Zhang

Chinese Meteorological Administration

Feng Chen

Yunnan University

Sharifjon Habibulloev

Chinese Academy of Sciences

Nazirakhon Khaidarova

National Academy of Sciences of the Republic of Tajikistan

Akbar Mukhamedov

National Academy of Sciences of the Republic of Tajikistan

Mavriyaposhokh Saburova

National Academy of Sciences of the Republic of Tajikistan

Humoyun Aliboev

National Academy of Sciences of the Republic of Tajikistan

Hui Tao

Chinese Academy of Sciences

Alberto Arzac

University of Cambridge

Ulf Büntgen

University of Cambridge

Short Report

Keywords: dendrochronology, increment borer, sample ejection, jammed core, field instrumentation, sample recovery

Posted Date: November 26th, 2026

DOI: https://doi.org/10.21203/rs.3.rs-11668650/v1

License: This work is licensed under a Creative Commons Attribution 4.0 International License.
Read Full License

Additional Declarations: No competing interests reported.

A NEW INCREMENT SAMPLE EJECTOR TO RESCUE TREE-RING SAMPLES

Zulfiyor Bakhtiyorov [*,1,2,3], Heli Zhang[4], Feng Chen[5,6,7], Sharifjon Habibulloev [2,3], Nazirakhon Khaidarova[3], Akbar Mukhamedov[3], Mavriyaposhokh Saburova[3], Humoyun Aliboev[3], Hui Tao [2], Alberto Arzac [1,8], Ulf Büntgen[1, 9,10].

[1] *Department of Geography, University of Cambridge, Cambridge CB2 3EN, UK.*
[2] *Xinjiang Institute of Ecology and Geography, Chinese Academy of Sciences, Urumqi 830011, China.*

[3] *Khujand Science Center, National Academy of Sciences of the Republic of Tajikistan, Khujand 735714, Tajikistan.*
[4] *Key Laboratory of Tree-ring Physical and Chemical Research of the Chinese Meteorological Administration/Xinjiang Laboratory of Tree-ring Ecology, Institute of Desert Meteorology, Chinese Meteorological Administration, Urumqi 830002, China*
[5] *Yunnan Key Laboratory of International Rivers and Transboundary Eco-Security, Institute of International Rivers and Eco-Security, Yunnan University, Kunming, 650500, China*
[6] *Southwest United Graduate School, Yunnan University, Kunming 650500, China*
[7] *Key Laboratory of Tree-ring Physical and Chemical Research of the Chinese Meteorological Administration/Xinjiang Laboratory of Tree-ring Ecology, Institute of Desert Meteorology, Chinese Meteorological Administration, Urumqi 830002, China*
[8] *Siberian Federal University, 79 Svobodnii, Krasnoyarsk, 660041, Russia.*
[9] *Global Change Research Institute, Czech Academy of Sciences, 603 00 Brno, Czech Republic.*

[10] *Department of Geography, Faculty of Science, Masaryk University, 611 37 Brno, Czech Republic.*

**Corresponding author. E-mail: zb308@cam.ac.uk*

Key Message

A screw-driven assembly advances a pushing rod while restraining the sampling tube, providing a controlled means of ejecting retained or fractured tree-ring samples.

Abstract

Increment borers are widely used in dendrochronological research, but wood cores may become compressed, fractured or retained inside the borer, complicating sample recovery and subsequent analyses. Here, we describe the design and operating principles of the Increment Sample Ejector, a screw-driven accessory developed to facilitate the removal of retained tree cores. The device combines a threaded rod with alignment and tube-retention components, allowing progressive axial displacement of retained material while restraining the sampling borer. We document its mechanical configuration, component functions and operating procedure. Unlike devices designed to recover increment borers lodged in tree stems, the proposed ejector specifically addresses core retention within the borer after sampling. The screw-driven configuration represents an alternative mechanical approach to existing sample-ejection devices. Although the design provides a practical basis for sample recovery, quantitative evaluation is required to determine its effectiveness, compatibility with different increment borers and potential effects on sample integrity.

Keywords: dendrochronology; increment borer; sample ejection; jammed core; field instrumentation; sample recovery

Introduction

Tree-ring studies depend on the recovery of readable wood cores whose ring sequence remains sufficiently intact for cross-dating, measurement, and anatomical examination. Classical manuals emphasise that successful coring requires not only proper boring technique but also careful extraction of the core from the instrument following sampling (Grissino-Mayer 2003; Phipps 1985). In practice, however, cores frequently remain lodged inside the hollow barrel,

particularly in dense woods, thick-barked trees, moist tissues, resinous conifers, and in situations where the core is not removed promptly after collection.

A retained core can damage the sample and interrupt fieldwork. Fractured material may remain inside the tube and obstruct subsequent sampling. Here, we describe the Increment Sample Ejector, designed to provide progressive, screw-driven axial ejection after the borer has been removed from the tree. Its architecture is described in Chinese utility model patent CN222979088U, filed on 17 July 2024 and published on 13 June 2025 (China National Intellectual Property Administration 2025).

Background and existing approaches

Mechanisms of sample retention

Three mechanisms commonly contribute to core retention inside the barrel. First, the core may be compressed during boring, particularly when passing through thick bark or mechanically resistant wood. Second, friction and adhesion between the core surface and the internal tube wall may increase owing to moisture, surface roughness, resin, or delayed extraction. Third, the core may partially fracture, producing multiple fragments that jam independently within the barrel. These problems reduce sample quality and complicate subsequent processing and analysis. Guidance on borer use covers core extraction, jamming and maintenance (Phipps 1985; Grissino-Mayer 2003), while Tyminski (2011) describes a technique for preventing bark-related jams. These preventive practices remain relevant, but an already retained or fractured sample may require a separate recovery procedure.

Previous recovery methods

Earlier work addresses both sample removal from a tube and borer recovery from a tree. Sharik et al. (1983) used a C-clamp to push a 2.4-mm core through a micro-borer. Commercial sample-ejection accessories include the CoreJector, which uses a pin to dislodge retained material at the

corer end (RINNTECH n.d.), and an ejector supplied for Jim-Gem increment borers (IML 2026). These examples preclude a claim that mechanical sample ejection itself is new. By contrast, the Borer Recovery Tool described by MacFarquhar et al. (2026) and the extractor in our accepted Trees article (Bakhtiyorov et al. in press) withdraw the borer shaft from the tree. The present report addresses the separate task of ejecting a sample from the hollow barrel after withdrawal. Its contribution is the screw-driven pushing arrangement together with the alignment, fixing and anti-drop components.

Materials and methods

Device architecture

The Increment Sample Ejector comprises six functional assemblies arranged along a shared longitudinal axis (Figs. 1–6; Table 1). Rotation advances the threaded rod towards the retained sample. The description follows the component arrangement in patent CN222979088U (China National Intellectual Property Administration 2025) and explains the assembly and operating sequence; it is not a dimensioned manufacturing specification.

Force transmission

Rotation is driven by a threaded rod (component 1), which constitutes the primary force-transmission element. The rod passes through a threaded hole (204) housed in a connecting rod (201), so that turning the rod produces linear advancement along the instrument axis. A limiter plate (202) is attached to the connecting rod and, together with a limiter hole (203), constrains the travel of the rod and ensures that the advancing force remains directed coaxially toward the retained core. A lever bar (301) fits into a dedicated socket (302) at the outer end of the threaded rod, providing mechanical advantage during manual rotation (lever assembly, component 3).

Connecting and fixing assemblies

A connection assembly (4) bridges the rod-side and tube-side sub-assemblies. Its principal element is a connecting tube (401) that physically joins the connecting rod to the tube-side components. Two auxiliary features are incorporated into the connecting tube: an observation hole (402) allows the operator to verify visually that the threaded rod is correctly positioned before force is applied, and a fixing hole (403) accepts a locking screw (5) that secures the connecting rod during operation.

At the distal end of the connection assembly, a fixing assembly (6) retains the hollow sampling tube (7) within a limiting tube (601). A placement opening (602) in the limiting tube facilitates insertion of the hollow tube. An open threaded tube (603) forms the interface between the connection assembly and the anti-drop assembly.

Sampling tube and anti-drop assembly

The hollow sampling tube (7) contains the retained core during field coring operations. One end carries a cutting head (8) for wood penetration; the opposite end interfaces with the anti-drop assembly (9). This assembly consists of a hollow threaded tube (901) and a bearing plate (902). During ejection, the bearing plate rests passively against the end of the open threaded tube (603), preventing the hollow sampling tube from being displaced axially as the threaded rod advances inward. This passive retention mechanism allows the advancing rod to exert its full force on the rear face of the retained core rather than pushing the entire tube assembly forward.

Component summary

Table 1 lists all numbered components and their functional roles, corresponding to the labels used in Figs. 1–6 and in the patent specification (China National Intellectual Property Administration 2025).

No.	Component name	Functional role
1	Threaded rod	Primary force-transmission element; advances axially upon rotation
2	Limiter assembly	Governs engagement depth and coaxial alignment of the threaded rod
201	Connecting rod	Movable sub-element linking rod to the connection assembly
202	Limiter plate	Fixed sub-element; defines maximum rod travel
203	Limiter hole	Guides and constrains rod position during advancement
204	Threaded hole	Receives and advances the threaded rod through rotation
3	Lever assembly	Provides mechanical advantage for manual rotation of the rod
301	Lever bar	Rotational input element held by the operator
302	Lever-bar socket	Coupling point between lever bar and threaded rod
4	Connection assembly	Structurally links the rod-side and tube-side sub-assemblies
401	Connecting tube	Main structural bridge between the two sub-assembly groups
402	Observation hole	Provides visual access to verify correct rod insertion depth
403	Fixing hole	Accepts the locking screw to secure the connecting rod
5	Locking screw	Fastens the connecting rod in place during operation
6	Fixing assembly	Retains the hollow sampling tube during ejection
601	Limiting tube	Seating structure within which the hollow tube is held

No.	Component name	Functional role
602	Placement opening	Entry aperture for insertion of the hollow tube
603	Open threaded tube	Bearing surface against which the anti-drop plate rests
7	Hollow sampling tube	Coring element; encloses the retained core to be ejected
8	Cutting head	Wood-penetration end of the sampling tube
9	Anti-drop assembly	Prevents axial displacement of the sampling tube during ejection
901	Hollow threaded tube	Connects the hollow tube to the bearing plate
902	Bearing plate (anti-drop plate)	Passive mechanical stop bearing against the open threaded tube

Table 1. Numbered components of the Increment Sample Ejector and their functional roles.

Operating procedure

Once a core has been collected and the borer withdrawn from the tree, the hollow sampling tube (with its retained core) is seated within the limiting tube of the fixing assembly. The connection assembly is then brought into position, and the connecting rod is secured using the locking screw inserted through the fixing hole. The threaded rod is advanced through the threaded hole — with depth confirmed through the observation hole — until its leading end contacts the rear face of the retained core material.

The operator inserts the lever bar into the socket at the outer end of the threaded rod and turns it in the advancing direction. As the rod progresses inward, it exerts a steady, axially directed force on the rear face of the core. Progressive advancement of the threaded rod applies axial pressure to the retained material, allowing the operator to attempt the removal of intact or fragmented cores. The success of this procedure depends on the degree of sample retention and the mechanical resistance encountered.. Because the ejection force is developed gradually through

the screw mechanism, the operator retains full control over the advancement rate and can pause at any stage to inspect progress.

During ejection, the bearing plate rests against the end of the open threaded tube and restrains the sampling tube. This arrangement directs the rod displacement towards the retained sample. The operator should maintain alignment, support the emerging sample and stop if resistance increases unexpectedly. Assembly and operation are illustrated in Online Resource 1; Online Resource 2 provides the supplementary file descriptions.

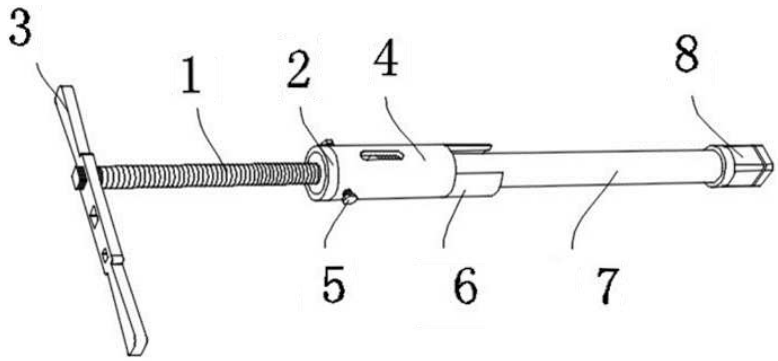

Fig. 1 Overall perspective view of the Increment Sample Ejector in the assembled configuration, with all major sub-assemblies aligned along the common longitudinal axis: threaded rod (1), limiter assembly (2), lever assembly (3), connection assembly (4), fixing assembly (6), hollow tube (7), cutting head (8), and anti-drop assembly (9)

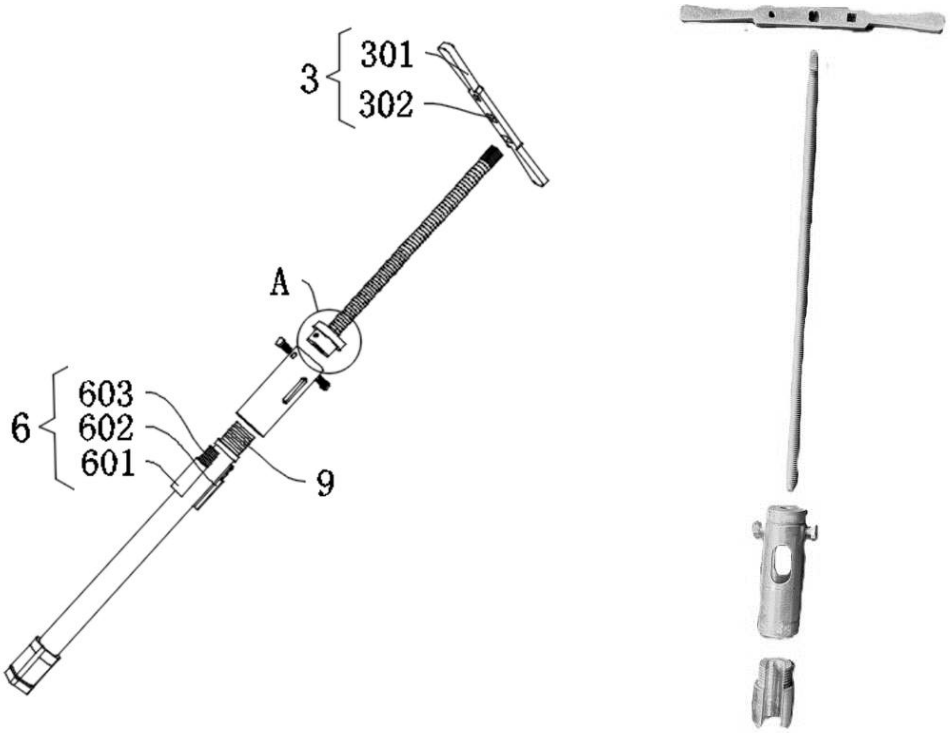

Fig. 2 Side perspective views of the Increment Sample Ejector (two orthogonal orientations) showing the spatial relationship among the threaded rod, connecting rod, limiter plate, and connecting tube. The rotational input at the outer end of the rod is translated into axial advancement directed toward the hollow sampling tube

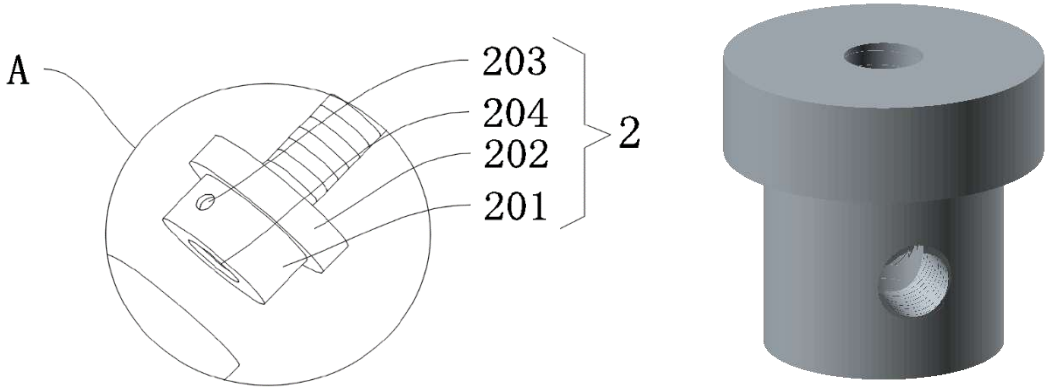

Fig. 3 Enlarged view of the rod-side control region (Detail A from Fig. 2). The limiter hole (203), threaded hole (204), and the interaction between the connecting rod (201) and limiter plate (202) together define the alignment of the threaded rod and ensure that ejection force is delivered coaxially

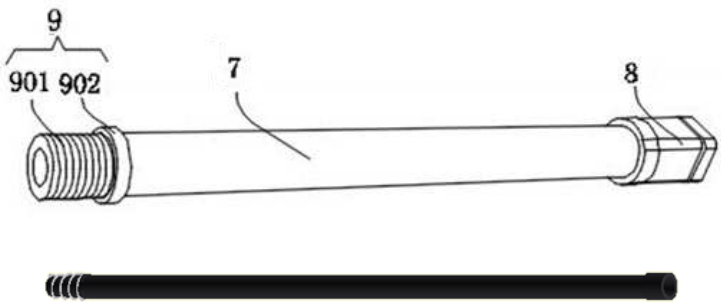

Fig. 4 Local perspective views of the tube-side assembly showing the hollow tube (7), cutting head (8), hollow threaded tube (901), and bearing plate (902). The bearing plate acts as a passive mechanical stop that retains the sampling tube in position while the lodged core is expelled by the advancing threaded rod

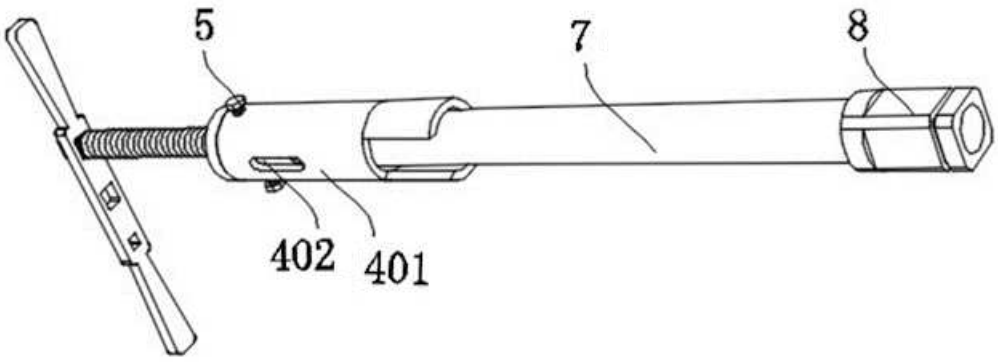

Fig. 5 Bottom perspective view of the connection and fixing region, showing the observation hole (402) and fixing hole (403) in the connecting tube (401), and their spatial relationship to the limiter plate (202), limiting tube (601), and open threaded tube (603)

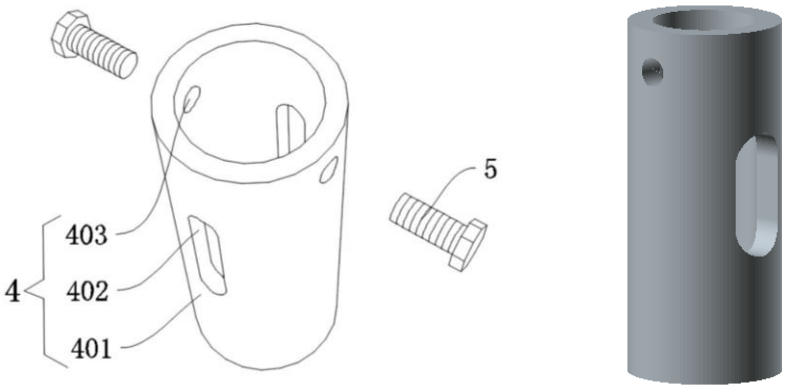

Fig. 6 Additional local perspective views of the tube-side assemblies (two orientations), further illustrating the structural relationships among the connecting tube (401), limiter plate (202), limiting tube (601), open threaded tube (603), and hollow sampling tube (7)

Results and discussion

The described assembly converts manual rotation into progressive axial displacement of a pushing rod while holding the sampling tube in position. The demonstration illustrates the operating sequence (Online Resource 1). The design is intended for retained samples, including fragments, after the borer has been withdrawn from the tree. Earlier micro-borer methods already used axial pushing (Sharik et al. 1983), and commercial ejectors address retained cores (RINNTECH n.d.; IML 2026). The present contribution is therefore the documented combination of screw advancement, alignment and tube restraint, rather than the first use of mechanical sample ejection.

This function is complementary to instruments for recovering a borer lodged in a tree (MacFarquhar et al. 2026; Bakhtiyorov et al. in press). In borer recovery, the load acts on the shaft to withdraw the instrument from the stem; in sample ejection, the load acts on wood retained inside the barrel. Distinguishing these tasks avoids conflating two different fieldwork problems.

The device was developed and used during repeated dendrochronological field campaigns in Tajikistan, Georgia and Uzbekistan, including sampling for earlier studies of tree-ring

chronologies and climate or streamflow reconstructions (Bakhtiyorov et al. 2021; Bakhtiyorov 2022a, b; Bakhtiyorov et al. 2023, 2024, 2025; Zhang et al. 2024). This field experience provided the operational motivation for the design and documents its application in tree-ring research. The present report provides a descriptive design account and an operating demonstration, rather than a comparative performance study. No replicated measurements of ejection force, recovery time, success rate or subsequent sample damage are reported. Benefits for sample integrity, field efficiency and borer service life therefore remain to be quantified. Compatibility with different barrel diameters and lengths, allowable loads, and performance on wet, resinous or fractured samples should be established before broad deployment. Detailed manufacturing dimensions and tolerances would also be needed for reproducible fabrication.

Conclusion

The Increment Sample Ejector provides a screw-driven arrangement for the progressive removal of retained tree-ring samples from increment borers. Its mechanical arrangement combines axial displacement with sampling-tube restrain, addressing a practical problem encountered during dendrochronological sampling. The device complements existing approaches for recovering stuck borers and removing restrained samples. The design and demonstration provide a basis for further development; controlled comparative testing is needed to establish its effectiveness and operating limits. Enquiries about a research-use unit may be directed to the corresponding author.

Acknowledgements

The authors thank Engineer Golib Muhammadjonov of Khujand for fabrication of the instrument used in this study.

References

Bakhtiyorov ZB (2022a) Climatic relationship of the tree-ring chronology from the Iskandarkul lake region. Bulletin of Bokhtar State University 2–3:85–90

Bakhtiyorov Z (2022b) Reconstruction of the river flow of the Yagnob river on the basis of the tree ring chronology. Khujand State University Scientific Notes 3:77–84

Bakhtiyorov Z, Yusupov Y, Kadirov A, Cheng F (2021) Tree-ring chronology for the "Iskandarkul" area, Sughd region, Tajikistan. Khujand State University Scientific Notes 2:63–69

Bakhtiyorov Z, Opała-Owczarek M, Chen F, Wang S, Shang H, Owczarek P, Khan A (2023) Streamflow reconstruction in the Kafirnigan River, Tajikistan since 1568 CE reveals a linkage between southern Central Asian hydrological variation and ENSO. International Journal of Climatology:1–12. https://doi.org/10.1002/joc.8031

Bakhtiyorov Z, Chen F, Chen Y, Wang S, Zhang H, Hu M, Yue W, Habibulloev S, Kavtaradze G, Gurskaya M (2024) Historical drivers and future streamflow variations of the Kura River in the Western Transcaucasia region of Georgia. Palaeogeography, Palaeoclimatology, Palaeoecology 655:112529. https://doi.org/10.1016/j.palaeo.2024.112529

Bakhtiyorov Z, Chen F, Chen Y, Wang S, Zhang H, Hu M, Yue W, Habibulloev S, Kavtaradze G, Rahmonov O (2025) Tree-ring blue-intensity reconstruction of the April–September maximum temperature in the Greater Caucasus region of Georgia since 1780 CE. International Journal of Biometeorology:1–16. https://doi.org/10.1007/s00484-025-02930-7

Bakhtiyorov Z, Zhang H, Chen F, Habibulloev S, Tao H, Arzac A, Büntgen U (accepted in October 2026) A new tool for the recovery of stuck increment borers. Trees

China National Intellectual Property Administration (2025) Growth cone core extraction device. Chinese utility model patent CN222979088U, published 13 June 2025. https://patents.google.com/patent/CN222979088U/en

Grissino-Mayer HD (2003) A manual and tutorial for the proper use of an increment borer. Tree-Ring Research 59:63–79

IML (2026) Optional accessories: ejector for Jim-Gem increment borer, item 4000128. Product catalogue, 15 January 2026. https://www.iml.de/wp-content/uploads/2026/01/2026-01-15_preisliste_iml_en.pdf. Accessed 1 November 2026

MacFarquhar C, McGillivray L, Graves O, Riley A, Becker S, Cusack D, Newsham S (2026) Borer recovery tool – A lightweight extractor for increment borers in dense and decayed hardwood trees. Dendrochronologia 97:126522. https://doi.org/10.1016/j.dendro.2026.126522

Phipps RL (1985) Collecting, preparing, crossdating, and measuring tree increment cores. US Geological Survey Water-Resources Investigations Report 85-4148. https://doi.org/10.3133/wri854148

RINNTECH (n.d.) CoreJector and Dry Wood Borer. Product information, North American distributor. https://rinntech.info/products/corejector-and-wood-borer/. Accessed 1 November 2026

Sharik TL, Ross MS, Price AH (1983) A micro-borer for extracting increment cores from small stems of woody plants. Forest Science 29:329–331. https://doi.org/10.1093/forestscience/29.2.329

Tyminski WP (2011) Preventing bark-caused increment borer jams: a modified technique for core extraction. Tree-Ring Research 67:123–126. https://doi.org/10.3959/2011-3.1

Zhang H, Zhao X, Chen F, Hu M, Wang S, Chen Y, Zulfiyor B, Yue W, Shang H, Fan Y (2024) Tree-ring records of drought and wetness variations in Southeastern Uzbekistan since 1780. Quaternary Sciences 44:920–927. https://doi.org/10.11928/j.issn.1001-7410.2024.04.06

Statements and Declarations

Funding

The development of the device and the associated patent work were supported by the National Natural Science Foundation of China (grant 32061123008), the Key Research and Development Program of Xinjiang Uygur Autonomous Region, China (grant 2022B03030), and ERC Synergy Grant 101118880 (Synergy-Plague).

Competing interests

The device described here is covered by Chinese utility model patent CN222979088U, whose listed assignee is Yunnan University. The authors declare no other known competing financial interests or personal relationships that could have influenced this work.

Author contributions

Z.B.: Conceptualisation, methodology, investigation, device prototyping, patent preparation, writing — original draft. H.Z.: Methodology, resources, patent support, writing — review and editing. F.C.: Methodology, resources, patent support, writing — review and editing. S.H., N.Kh., A.M., M.S., H.A.: Investigation, field experiments, validation. H.T.: Conceptualisation, supervision, writing — review and editing. A.A.: Conceptualisation, writing — review and editing. U.B.: Conceptualisation, supervision, writing — review and editing.

Data availability

The device description and illustrations are included in this article and patent CN222979088U. The operating demonstration is supplied as Online Resource 1. No quantitative comparative dataset is reported in this study.

Use of generative AI

The authors used generative AI solely for minor language editing, and not for the generation of scientific content, data analysis, figures, interpretation, or conclusions; all content was reviewed and approved by the authors.

Supplementary information

Online Resource 1 Assembly of the Increment Sample Ejector, engagement of the threaded rod and demonstration of sample ejection (MP4).

Supplementary Files

This is a list of supplementary files associated with this preprint. Click to download.

- ESM1.mp4