Research Square

Preprints are preliminary reports that have not undergone peer review.
They should not be considered conclusive, used to inform clinical practice,
or referenced by the media as validated information.

Study on Reasonable Pitch Angle and Mining Technology of Working Face Passing through V-shaped Fold

CAO Jian

2020913@imust.edu.cn

Inner Mongolia University of Science and Technology

NIU Xinyang

Inner Mongolia University of Science and Technology

LIU Chunxiao

Inner Mongolia University of Science and Technology

LI Liang

Inner Mongolia University of Science and Technology

MAO Xuwei

Inner Mongolia University of Science and Technology

XIE Xiaoshen

Inner Mongolia University of Science and Technology

Article

Keywords: Pitch angle, undercut quantity, V-shaped fold, three fully mechanized mining machines, equipment posture

Posted Date: November 25th, 2026

DOI: https://doi.org/10.21203/rs.3.rs-11623012/v1

License: This work is licensed under a Creative Commons Attribution 4.0 International License.
Read Full License

Additional Declarations: No competing interests reported.

Study on Reasonable Pitch Angle and Mining Technology of Working Face Passing through V-shaped Fold

CAO Jian[1,2,3,4*]，NIU Xinyang[1,2,3,4]，LIU Chunxiao[1]，LI Liang[1,2,3,4]，MAO Xuwei[1,2,3,4]，XIE Xiaoshen[1,2,3,4]

1. School of Mining and Coal, Inner Mongolia University of Science and Technology, Inner Mongolia, Baotou 014010, China;

2. Inner Mongolia Key Laboratory of Mining Engineering, Inner Mongolia, Baotou 014010, China;

3. Inner Mongolia Research Center for Coal Safety Mining and Utilization Engineering and Technology, Inner Mongolia, Baotou 014010, China;

4. Inner Mongolia Cooperative Innovation Center for Coal Green Mining and Green Utilization, Inner Mongolia, Baotou 014010, China

Corresponding author: CAO Jian（2020913@imust.edu.cn）

Abstract: As coal extraction increasingly extends into areas characterized by complex geological conditions, fold structures have become an important constraint on the continuous and safe operation of fully mechanized longwall faces. Such conditions impose more stringent requirements on the coordinated operation and attitude control of the shearer, armored face conveyor, and hydraulic supports. To address equipment attitude adjustment and potential mechanical interference during the traversal of a V-shaped fold, a method combining theoretical analysis and field practice was used to determine a rational pitch angle for fully mechanized mining equipment. An equipment-geological structure coupled geometric model was established in AutoCAD to analyze the spatial relationships and passage characteristics of the shearer, AFC, and hydraulic supports under different pitch-angle conditions. [Results and Conclusions] The results indicate that the rational pitch-angle range for the shearer when traversing a V-shaped fold is 5-7°. When the pitch angle exceeds this range, the risk of interference between the shearer and the AFC increases, together with the likelihood of damage to critical components of the fully mechanized mining equipment. Based on these results, an integrated mining procedure for traversing V-shaped folds was developed. Downward cutting should be initiated approximately 25 m before the longwall face reaches the fold, and an advance distance of approximately 66 m is required to complete the equipment attitude adjustment. For V-shaped folds with a large span, a sufficiently long attitude-transition section should be provided to moderate variations in equipment pitch and reduce operational risks during fold traversal. Field application showed that appropriate control of the shearer cutting depth and equipment pitch angle reduced the failure rate of the fully mechanized mining equipment by more than 40% and increased the longwall face advance efficiency by 35%.The research results can provide a new method for working faces to pass through folds under similar geological conditions.

Key words: Pitch angle; undercut quantity; V-shaped fold; three fully mechanized mining machines; equipment posture

1 Introduction

Coal remains a major primary energy source and strategic resource in China. However, decades of intensive mining have steadily depleted high-quality shallow coal seams. As mining moves into areas with increasingly complex geological structures, achieving safe and efficient extraction has become a major challenge for the sustainable development of the coal industry. Field observations show that seam undulations associated with a V-shaped fold can substantially alter the operating postures of the three major pieces of equipment in a fully mechanized longwall face. In the absence of quantitative criteria for pitch-angle control, operators typically adjust equipment postures by relying on field experience. Such adjustments can result in abnormal shearer loading, accelerated component wear, and reduced cutting efficiency. These problems can, in turn, constrain the face advance rate and hinder safe, efficient production in folded areas.

Coal-rock cuttability directly affects cutting efficiency and provides a key theoretical basis for optimizing fully mechanized mining processes[1]. Cuttability is fundamentally governed by the mechanical strength and fracture structure of the coal and rock, as well as by the degree of confinement. Cutting loads, fragmentation patterns, and rib-spalling behavior vary markedly across coal-rock strength grades[2-3]. Coal-rock compressive strength is also strongly correlated with cutting specific energy consumption[4-5]. Operating parameters—including cutter geometry, cutting speed, haulage speed, and cutting thickness—directly influence cutting dynamics and energy consumption[6-10]. Quantitative assessments of coal-rock cuttability have primarily relied on laboratory cutting tests, field monitoring data, and theoretical models. These approaches underpin an evaluation framework centered on cutting specific energy consumption and the Protodyakonov strength coefficient[11-14].

Ground control as fully mechanized longwall faces pass through folds has long been a major topic in mining engineering. Researchers worldwide have extensively investigated stress evolution in folded strata, hazard prediction, and prevention and mitigation measures. Previous work has characterized stress and energy distributions in folded zones and explained how coupled tectonic and mining-induced stresses can destabilize the surrounding rock. It has also established how seam thickness and mining intensity affect strata behavior in these areas[15-22]. Researchers have also developed methods for predicting fold-related hazards and proposed control measures such as pressure relief, parameter optimization, and enhanced support. Together, these advances support safe production at longwall faces that encounter fold structures[23-25].

Previous research has focused primarily on surrounding-rock failure mechanisms and broad control strategies in folded structures. Systematic investigations of equipment posture, coordinated control of the three major machines, and refined mining procedures under V-shaped-fold conditions remain limited. In the field, fold-crossing procedures are largely experience-based. They often involve an abrupt, steep downward cut and rely on auxiliary measures, such as individual props and suspended conveyors, to move the equipment through the fold. The absence of a defined optimal pitch-angle range for the shearer can lead to poorly timed changes in mining procedures, excessive equipment wear, and slow face advance. This study examines mining at the 8716 working face of a mine and focuses on determining an appropriate pitch angle for passing through a V-shaped fold. The study systematically evaluates equipment passage performance and coordination across a range of pitch angles. The optimal pitch-angle control range is determined quantitatively. The results provide a theoretical basis and practical guidance for precise equipment control, reduced wear, and improved extraction efficiency in complex folded strata.

2 Overview of the Longwall Face

The 8716 working face is mining the No. 11 coal seam, which is affected by fold structures. The seam is 0.8-4.87 m thick, averaging 3.03 m, and dips at 1°-9°, with an average dip of 5°. Five folds were identified along the 5716 roadway at face advance intervals of 70-109 m, 234-251 m, 293-306 m, 446-487 m, and 1817-1868 m. The folds span 13-59 m.

The 8716 face is equipped with an MG650/1630-WD shearer. Its key dimensions are a ranging-arm length of 2886 mm, a travel-wheel center distance of 6360 mm, a ranging-arm pivot-center distance of 1428 mm, a body width of 1660 mm, a machine height of 1628 mm, and a drum diameter of 2240 mm; its cutting depth is 0.8 m. The face also uses ZZ10000/20/38 shield supports. Each support is 1.66-1.86 m wide and 2.0-3.8 m high, with a support area of 8.3 m² and an advance step of 0.8 m. The face is served by an SGZ-1000/1710 scraper conveyor with external dimensions of 1750 × 1000 × 362 mm. The three major pieces of equipment at the face are shown in Fig. 1.

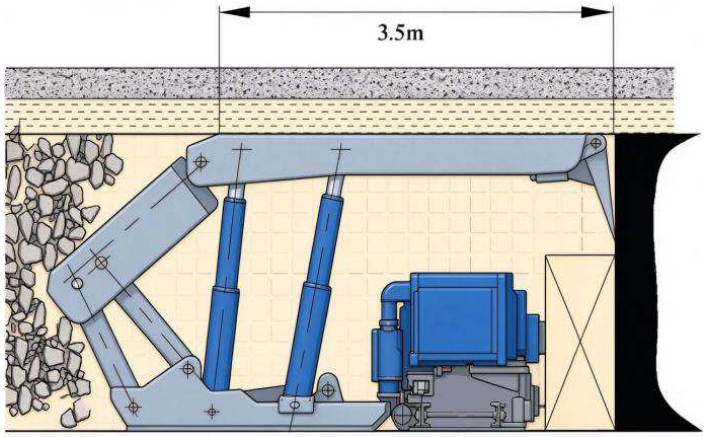

Fig.1 Three machine of longwall face No.8716

3 Determination of the Optimal Mining Height for Longwall-Face Passage through the V-Shaped Fold

For folds that are relatively long along strike and gently inclined, the three major pieces of equipment can pass through with only a small pitch angle. By contrast, shorter, steeper folds require a longer transition section for equipment passage and are better suited to a more pronounced fold-crossing approach. Accordingly, this study uses a representative V-shaped fold model with a 20 m span and a height of 3 m (Fig. 2).

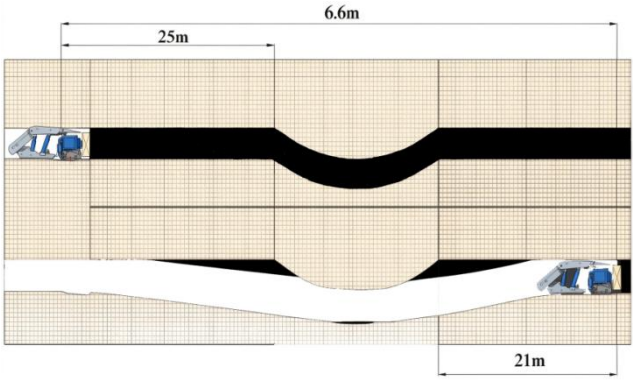

Fig.2 Overall model of shearer traversing V-shaped fold

Based on the structural parameters and dimensions of the three major pieces of equipment in a fully mechanized longwall face, hydraulic-support passability is the governing constraint on equipment passage through a fold. If the hydraulic supports can pass through the fold, the shearer and scraper conveyor can also pass through it. Accordingly, equipment profiles were constructed using the actual support dimensions. CAD simulations were then conducted to model the supports as they entered the V-shaped fold, with support height adjusted dynamically to match the fold geometry (Fig. 3).

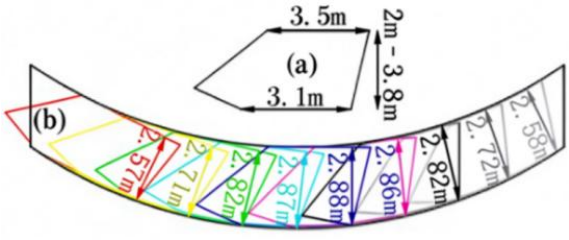

Fig.3 Schematic of mining height for hydraulic support contour traversing V-shaped fold

Key operating-condition data were extracted from Fig. 3 and fitted in Origin to establish the relationship between face mining height and support penetration distance into the fold (Fig. 4). The fitted curve indicates that, for the modeled V-shaped fold, the safe passage range for the hydraulic supports corresponds to a face mining height of 2.57-2.88 m.

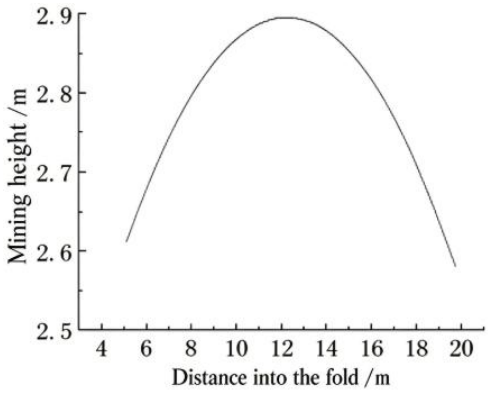

Fig.4 Fitting curve of mining height of hydraulic supports traversing V-shaped fold

Theoretical analysis identifies 2.57-2.88 m as the optimal mining-height range for support passage through the fold. In practice, however, uneven roof and floor conditions and dynamic changes in support pitch angle during face advance require a mining height greater than 2.9 m to ensure smooth passage of all three major pieces of equipment through the fold. During horizontal face advance, the support requires a minimum mining height of 2.7 m. Accordingly, the actual mining height should exceed the theoretical value to ensure normal support operation and provide an adequate operating margin. On this basis, the shearer cutting height is controlled within 3.0-3.5 m.

4 Pitch-Angle Analysis of the Three Major Pieces of Equipment during Passage through the V-Shaped Fold

An MG650/1630-WD shearer was selected for this study. It is equipped with 2.24 m-diameter drums, has a maximum downward cutting depth of 500 mm, and a cutting depth of 800 mm. To simplify the

analysis and minimize the influence of extraneous variables, two approaches were used to investigate how the shearer pitch angle changes as the machine passes through a V-shaped fold.

(1) Roof cutting with the floor profile retained

The shearer follows the floor profile and cuts the roof rock within the fold-affected zone to facilitate equipment passage. During the operation, the shearer and hydraulic supports are intended to follow the lower profile of the V-shaped fold as closely as possible. The simulated sequence is shown in Fig. 5.

(i) Before reaching the fold-affected zone, the shearer cuts along a straight floor profile in the flat-seam section. Upon entering the fold, the shearer requires a downward cutting depth of 498 mm to follow the floor profile. This is within its 500 mm maximum and therefore meets the operating limit.

(ii) With further face advance, fully following the floor would require a downward cutting depth of 941 mm, which exceeds the equipment limit. The subsequent operation therefore uses a constant downward cutting depth of 498 mm.

(iii) The shearer continues to operate at a downward cutting depth of 498 mm.

(iv) Once the armored face conveyor's center of gravity passes the critical point A (step 4 in Fig. 5), the shearer and conveyor rotate clockwise about A as cutting continues. At this point, the conveyor is inclined at 24° to the horizontal. This substantially exceeds the mining-regulation limit of ±5° for the alignment deviation between the hydraulic supports and the conveyor. In addition, the shearer's limited cutting height prevents the hydraulic supports from passing through the fold smoothly (Fig. 6). Overall, the roof-cutting, floor-retaining approach has significant technical limitations and is of limited practical feasibility.

(2) Floor cutting with the roof profile retained

The hydraulic supports advance along the undulating roof profile, while the shearer cuts along the lower boundary of the fold. A suitable downward cut is maintained at the floor to allow the equipment to pass smoothly through the fold. The approach aims to ensure safe equipment passage while minimizing cutting of the rock at the top of the fold.

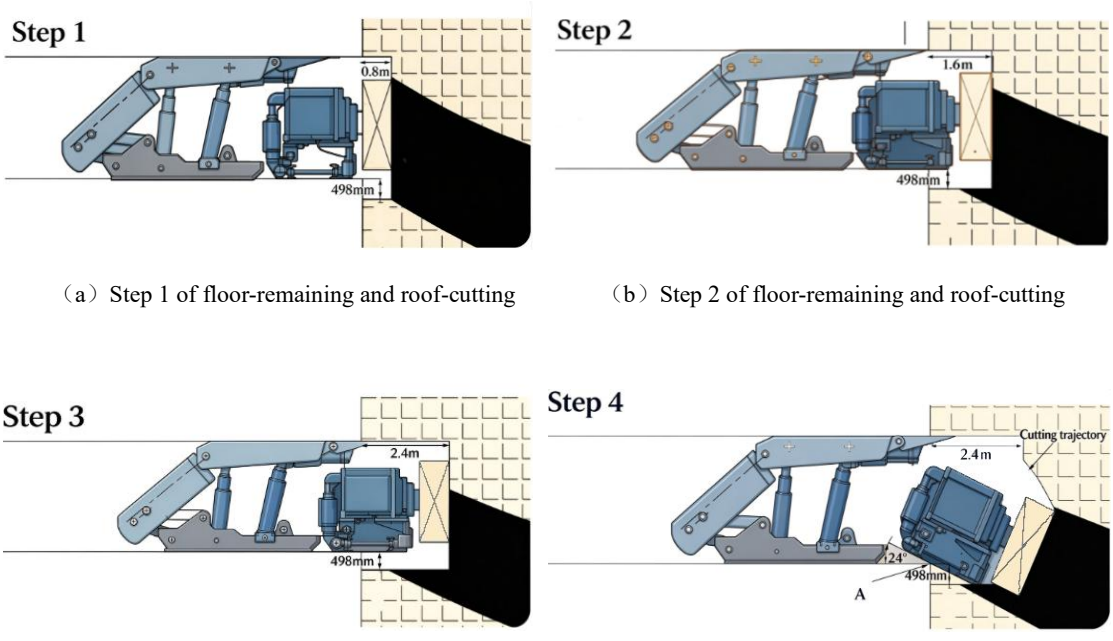

（a）Step 1 of floor-remaining and roof-cutting （b）Step 2 of floor-remaining and roof-cutting

（c）Step 3 of floor-remaining and roof-cutting （d）Step 4 of floor-remaining and roof-cutting

Fig.5 Advancing process for floor-remaining and roof-cutting

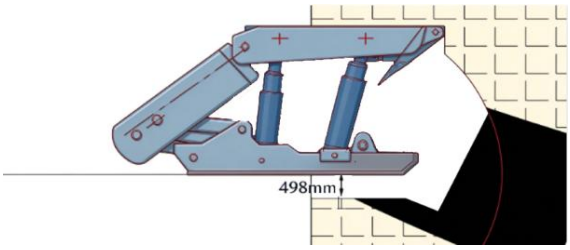

Fig.6 Simulation process of hydraulic supports traversing the shearer

For the MG650/1630-WD shearer, complete passage through a V-shaped fold with a 20 m span and a 3 m vertical drop theoretically requires 25 cutting passes. Under field conditions, the required number increases to approximately 30 passes because of factors such as the shearer's effective cutting depth being less than 800 mm and the curved geometry of the fold. Calculations indicate that a floor undercut of 200-240 mm per pass is needed to ensure smooth shearer passage.

Figure 7 shows the cutting trajectory for an 800 mm shearer advance along the lower boundary of the fold. The corresponding floor-undercut values, calculated from the cutting parameters, are reported in Table 1. As shown in Table 1, the required floor undercut decreases progressively with each successive cutting pass. By the tenth pass, the required undercut has fallen to about 100 mm, indicating that the face is approaching near-level mining conditions.

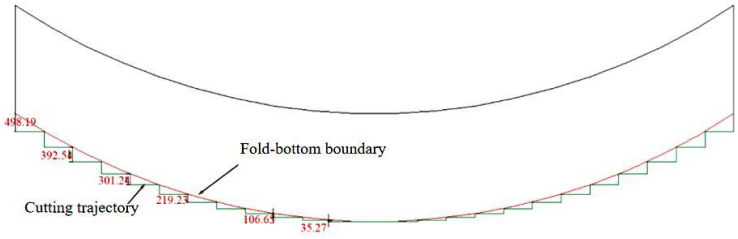

Fig.7 Theoretical downward-cutting depth

Table 1 Theoretical downward-cutting depth

Cutting pass	1	2	3	4	5	6
Undercut/mm	498.19	443.15	392.54	345.46	301.24	259.31
Cutting pass	7	8	9	10	11	12
Undercut/mm	219.23	180.63	143.19	106.65	70.75	35.27

Considering the ±5° limit on angular deviation between the hydraulic supports and the scraper conveyor, as well as the three full-depth cutting passes required to adjust the shearer pitch, the optimal undercut amounts per pass are calculated as 70, 140, and 210 mm (Fig. 8).

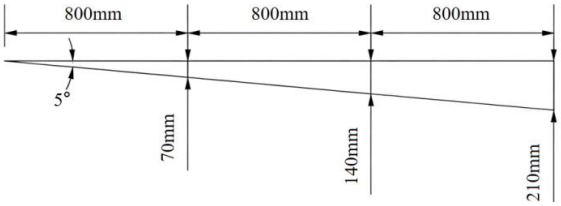

Fig.8 Schematic for calculation of optimal downward-cutting depth

With the undercut increased by 70 mm per successive pass, the shearer requires 42 cutting passes to reach the bottom of a V-shaped fold with a 3 m vertical drop. Because only about 12 passes occur within the fold's effective influence zone, pre-transition cutting must begin 24 m before the fold. The complete cutting sequence is shown in Fig. 9.

Under this method, floor pre-cutting begins 24 m ahead of the fold. To keep the hydraulic supports and scraper conveyor in compliant, near-perpendicular alignment, the undercut is set to 70, 140, 210, and 280 mm for the first four passes, respectively. After the first four passes, the shearer adjusts its posture and follows the planned cutting trajectory (Figs. 9a and 9b), at an angle of 5° to the coal face. Following the bottom profile of the scraper-conveyor trough enables the shearer to operate steadily at the specified undercut settings.

By the 10th or 11th pass, the hydraulic supports have fully adapted to the planned cutting trajectory, restoring perpendicular alignment between the supports and the scraper conveyor. At this stage, the face mining height reaches 3.8 m, the shearer's maximum operating height (Fig. 9c).

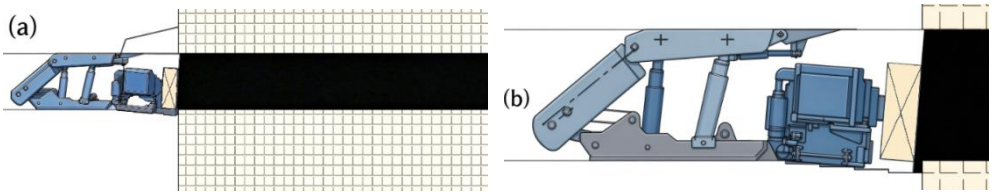

（a）Step 1 of roof-remaining and floor-cutting　　（b）Step 2 of roof-remaining and floor-cutting

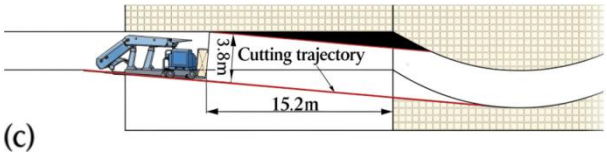

（c）Step 3 of roof-remaining and floor-cutting

Fig.9 Advancing process for roof-remaining and floor-cutting

Figure 10 shows the simulated condition after the shearer has fully entered the flat bottom section of the fold. The simulation indicates that three successive undercuts of -69, -71, and -71 mm bring the shearer body to an approximately level position. After a further 2.8 m of advance, the equipment begins to climb out of the fold. A portion of the floor coal must be left uncut during this stage to maintain stable operation.

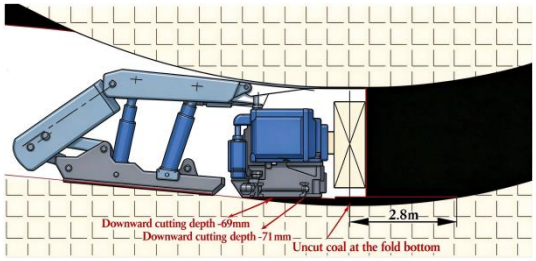

Fig.10 Simulation diagram of shearer fully entering the leveling section at the bottom of V-shaped fold

As shown by the simulation in Fig. 11a, when the shearer follows the V-shaped fold profile, the seam height at the fold's lowest point is 2.8 m when the shearer is 2.8 m from the bottom of the fold. Although the 2.8 m seam height slightly exceeds the supports' minimum allowable mining height of 2.7 m, their 4° inclination relative to the horizontal prevents them from passing through the fold smoothly.

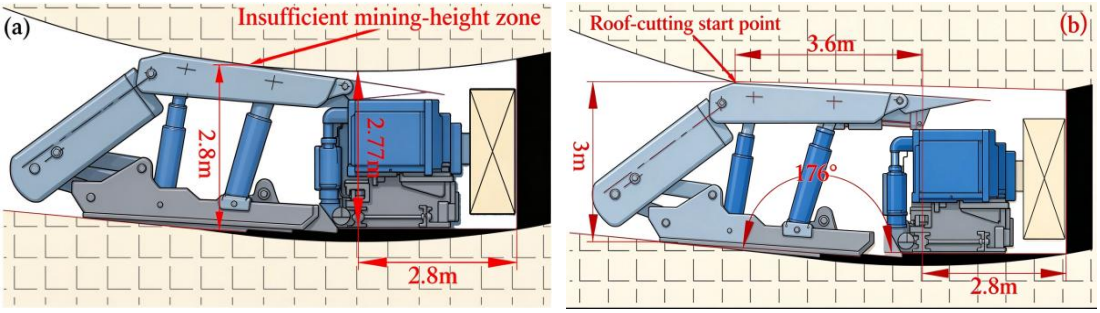

（a）Failure of support to pass through the fold （b）Smooth passage of support through the fold

Fig.11 Simulation diagram of shearer traversing the leveling section at the bottom of V-shaped fold

The simulations indicate that, to enable the hydraulic supports to pass through the bottom of the V-shaped fold, they must operate at the optimal mining height of 3 m when the shearer is 3.6 m from the fold's lowest point. This requires cutting the roof rock, as shown in Fig. 11b. At this position, the included angle between the shearer and the hydraulic supports is 176°.

Figure 12 presents the simulated passage of the shearer out of the V-shaped fold and into the level section. The simulation shows that, 5 m beyond the fold's lowest point, the shearer, scraper conveyor, and hydraulic supports are aligned on the same horizontal plane. At this point, the face mining height at the shearer drum is 3.5 m, the upper limit of the optimal range for the fully mechanized equipment.

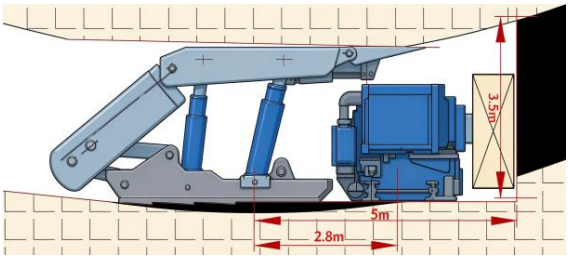

Fig.12 Simulation diagram of shearer exiting the fully-leveled section at the bottom of V-shaped fold

Figure 13 shows the simulated shearer climbing out of the level section at the fold bottom with an upward pitch angle of 5°. At a position 5 m beyond the lowest point of the V-shaped fold, the shearer cuts the coal-rock mass using successive undercut amounts of -70, -140, and -210 mm. After these three progressively adjusted cuts, the shearer continues cutting while maintaining a stable 5° upward pitch.

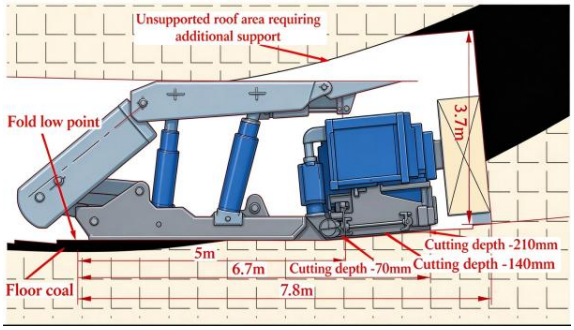

Fig.13 Simulation diagram of shearer climbing transition section at 5° pitch-up angle

The hydraulic supports have an allowable operating pitch-angle range of ±7°, which must be observed during operation. Figure 14 shows the simulated transition as the shearer climbs from a 5° to a 7° upward pitch. The transition to a 7° upward pitch begins when the shearer has advanced 11.4 m beyond the lowest point of the V-shaped fold. The shearer then makes three successive cuts with undercuts of -30, -60, and -90 mm. After these three passes, the shearer can advance steadily at a 7° upward pitch.

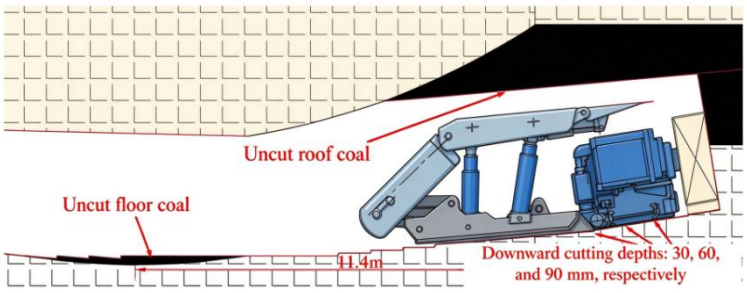

Fig.14 Simulation diagram of shearer climbing transition section at 7° pitch-up angle

Figure 15 illustrates the simulated transition from 7° upward climbing until the shearer trajectory coincides with the roadway centerline. The transition comprises four stages.

Stage a: All three pieces of equipment follow the 7° climbing trajectory (Fig. 15a). Once the shearer has advanced 11.7 m beyond the fold's lowest point, all three pieces of equipment follow the 7° climbing path. The face mining height is maintained at 3.5-3.7 m to prevent support jamming during the transition and allow the supports to advance smoothly.

Stage b: The shearer's upward pitch is reduced from 7° to 2° (Fig. 15b). The shearer makes three passes, with successive undercuts of 70, 140, and 210 mm. After these passes, the shearer is set to a 2° cutting pitch.

Stage c: All three pieces of equipment follow the 2° climbing trajectory (Fig. 15c). Once the shearer has advanced 17.8 m beyond the fold's lowest point, all three pieces of equipment are on the 2° climbing path.

Stage d: The shearer transitions back to horizontal advance (Fig. 15d). After the three pieces of equipment enter the 2° climbing path, the shearer makes three further passes with undercuts of 60, 110, and 170 mm. It can then transition to horizontal advance.

This staged cutting method distributes the fold throw across multiple passes with small undercuts. It replaces abrupt changes in angle with a gradual posture transition over a longer distance, keeping the relative angular deviations among the three pieces of equipment within their allowable limits and enabling them to pass through the fold smoothly.

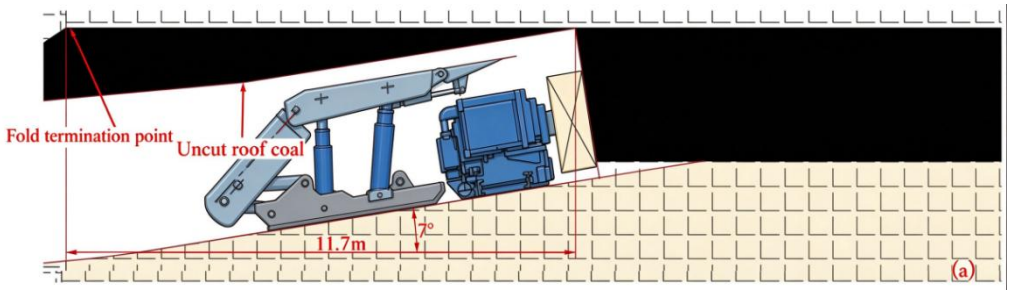

（a）Coincidence of three-machine system with the 7° climbing trajectory

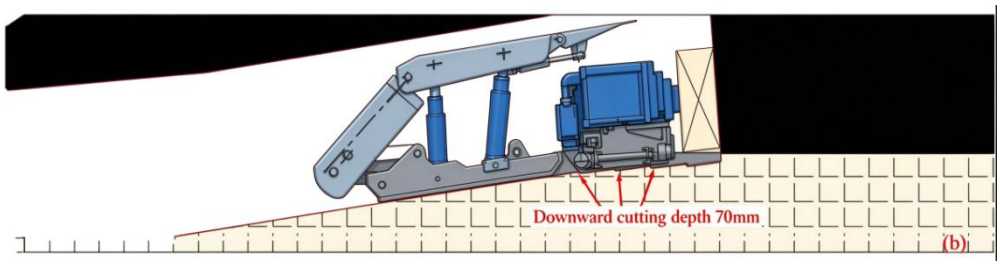

（b）Transition of shearer elevation angle from 7° to 2°

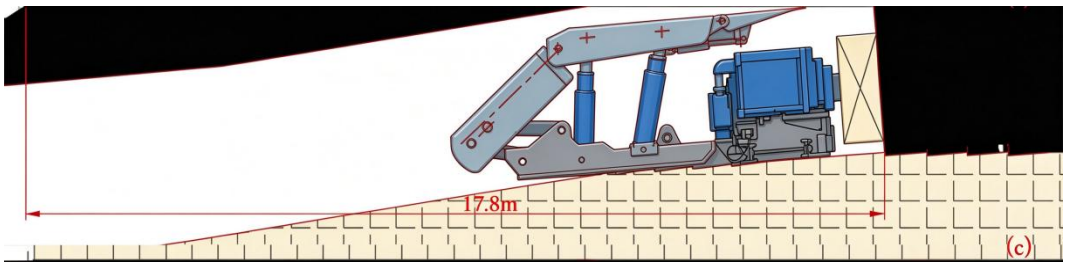

（c）Operation of three-machine system along 2° climbing trajectory

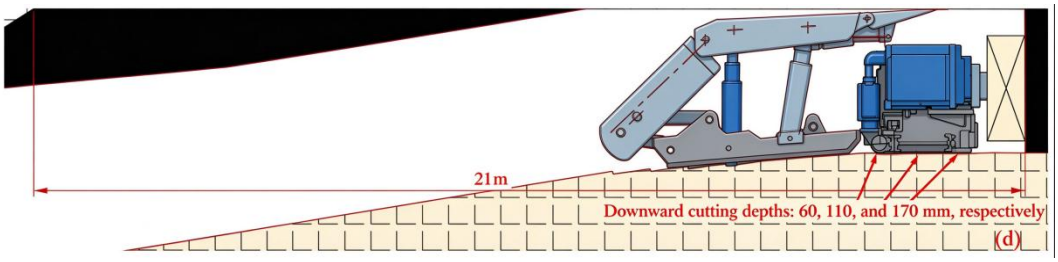

（d）Return of shearer to horizontal advancing path

Fig.15 Simulation diagram of shearer climbing from 7° pitch-up angle to fully-leveled position

5 Engineering Application and Fold-Crossing Procedure Optimization

5.1 Comparison of Face-Advance Performance during Normal Mining and Fold Crossing

The coal and rock mass was relatively intact in the 0-58 m section, with almost no hard rock present. Under these favorable conditions, mining through the section took only 19 days. At an advance distance of 59 m, medium sandstone was first encountered in the roof above supports No. 26-49, reaching a maximum thickness of 1.2 m. With continued face advance, both the extent and thickness of the hard rock increased. At an advance distance of 71 m, sandstone in the folded zone was 2.8 m thick, substantially increasing the difficulty of shearer cutting. Field records show that the face took 10 days to advance through the short 58-71 m section. Pick consumption remained exceptionally high even after imported, high-strength picks were installed. Figure 16 shows that shearer pick consumption rises markedly in folded zones where hard strata, including coarse sandstone, are present.

Consequently, the advance per cut fell from the typical 0.8 m to 0.2 m, severely reducing face-advance efficiency.

The harder coal and rock increased pick wear and made hard rock fragments more likely to become trapped between the shearer's travel wheel and the pin rack. The shearer must crush these trapped fragments as it travels, substantially increasing the contact load between the travel wheel and pin rack. As a result, travel-wheel failures occur frequently; at the peak, one wheel had to be replaced per day. This seriously disrupted continuous, stable production.

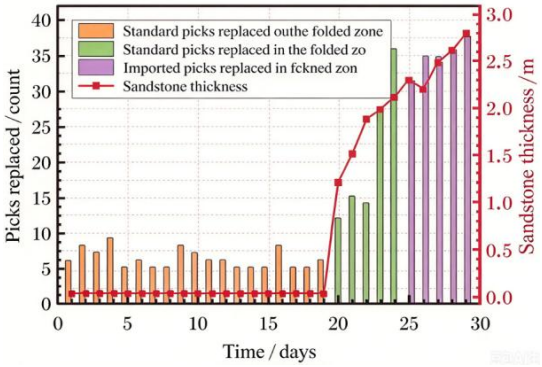

Fig.16 Relationship between daily replacement quantity of picks and sandstone thickness

5.2 Previous Field Experience in V-Shaped Fold-Crossing Operations

In the conventional field procedure, floor undercutting begins 1-2 m ahead of a major fold. Two successive cuts are made, each with a 200 mm undercut, to establish an inclined shearer posture that is then maintained during advance (Fig. 17). This method produces a 14° angular deviation between the hydraulic supports and the scraper conveyor, preventing the conveyor from being advanced smoothly to the target plane. Operators often use individual hydraulic props to force the scraper conveyor to an angle of 12-13°, then rely on the hydraulic supports to advance it. This procedure is cumbersome and labor-intensive, and it introduces additional safety risks. Figure 18 shows individual hydraulic props being used to assist conveyor advance.

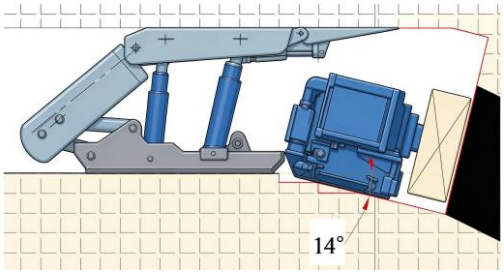

Fig.17 Included angle between hydraulic supports and armored face conveyor

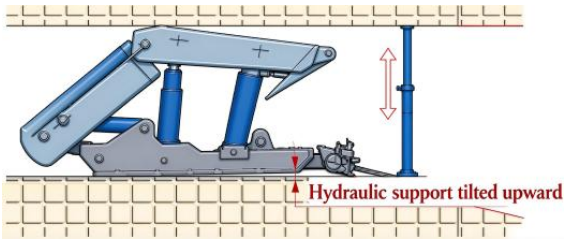

Fig.18 Adjusting the angle of armored face conveyor by single prop

Figure 19 illustrates the forces acting on the shearer during downward-pitch cutting. The resulting axial and radial forces are given by:

$$F_a = G \sin\theta \quad (1)$$

$$F_b = G \cos\theta \quad (2)$$

where G is the shearer weight (864.36 kN), θ is its pitch angle, and F_a and F_b are the axial and radial forces generated by the shearer, respectively.

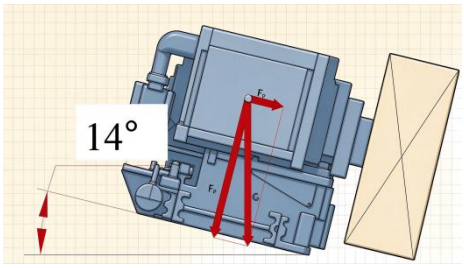

Fig.19 Mechanical state of shearer under cutting condition of V-shaped fold

The shearer's radial load is shared by two travel wheels and two flat sliding shoes. Because the flat shoes provide radial support only, the axial load is carried entirely by the two walking assemblies, which comprise the travel wheels and handshake-type sliding shoes. The axial and radial forces acting on the travel wheels can therefore be expressed as follows:

$$f_a = \frac{F_a}{2} \tag{3}$$

$$f_b = \frac{F_b}{4} \tag{4}$$

where f_a and f_b denote the axial and radial forces acting on one walking unit, respectively.

The force components acting on the shearer's walking units were calculated for different pitch angles and are summarized in Table 2. At a 7° downward pitch, the axial force on the travel wheel is 24.6% of the radial force. At 14° downward pitch, the axial force increases to 1.99 times its value at 7° and reaches 49.86% of the radial force. These results show that increasing the downward pitch markedly increases the axial load on the travel wheel.

Table 2 Force state of single travelling wheel of shearer under different pitch-down angles

Angle/° / Stress	-14	-7	-5	0	5	7	14
Radial stress/kN	209.6	214.4	215.2	216.3	215.2	214.4	209.6
Axial stress/kN	-104.5	-52.67	-37.67	0	37.67	52.67	104.5

Figure 20 compares travel-wheel operation under conventional conditions and at a pitch angle. Under inclined operation, severe wear develops on the travel-wheel sidewall. The resulting wheel bounce can lead to bearing failure. A worn travel wheel also accelerates pin-rack damage, which in turn further reduces the wheel's service life. This reciprocal deterioration creates a cycle of escalating wear.



Fig.20 Typical wear of travelling wheel under pitch-up and pitch-down angles

When the shearer is 2.28 m from the fold bottom, the scraper conveyor must be leveled. The relative positions of the three major pieces of equipment are shown in Fig. 21. At this point, the 14° angular deviation between the scraper conveyor and hydraulic supports prevents the support bases from seating properly on the floor. The 200 mm step can also catch the conveyor's lower edge during advance, preventing the supports from pushing the scraper conveyor forward as intended.

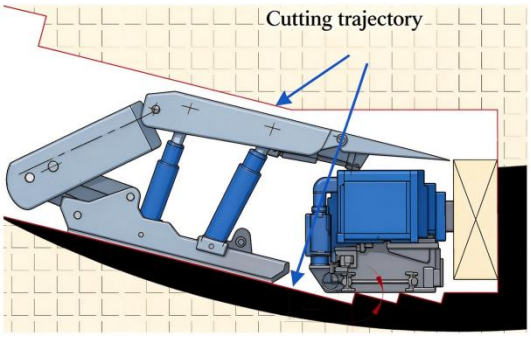

Fig.21 Relative-position of three machines in the fully-leveled section

4.3 Optimization of the V-Shaped Fold-Crossing Procedure

A single 200 mm undercut is likely to cause substantial operational difficulties as the shearer passes through the fold. When a fold lies ahead, the transition procedure should begin approximately 25 m in advance. Limiting each undercut to 70 mm allows the shearer to approach the fold gradually at a 5° inclination, extending the transition distance and enabling safe passage of the longwall equipment.

A V-shaped fold with a 3.1 m vertical drop occurs in the 234-251 m section of the 8716 face tailgate. The conventional method can cause insufficient mining height and obstructed support passage at the pitch-adjustment point. It may also leave the shearer unable to return and complete a cut after advancing beyond the target position. To address these risks, the following fold-crossing procedure was designed:

(1) Increase the face mining height to 3.5-3.7 m, beginning 2 m before the pitch-adjustment point, to facilitate equipment passage.

(2) At the 208 m position, make three successive cuts with undercuts of 70, 140, and 210 mm, then advance the shearer at a steady 5° inclination.

(3) Begin leveling the three-machine system approximately 3 m from the fold bottom; after two cuts, the equipment is nearly level and can advance horizontally.

(4) Once the shearer is 5 m beyond the fold's lowest point, use successive undercuts of -70, -140, and -210 mm to raise the shearer assembly onto the climbing trajectory. Because the required lift is small, the scraper conveyor can be advanced directly into position without using a suspended-conveyor procedure. The system then continues along a 5° upward trajectory.

(5) After the supports and scraper conveyor enter the 5° climbing path, use successive undercuts of -30, -60, and -90 mm to increase the climbing angle to 7°, then continue advancing at that angle.

(6) At a position approximately 12 m beyond the fold, make three successive cuts with undercuts of 70, 140, and 210 mm to lower the posture of the three-machine system.

(7) Once the three-machine system enters the 2° climbing path, use successive undercuts of 60, 110, and 170 mm to gradually return the equipment to a level posture. This completes the fold-crossing operation over a transition section of approximately 68 m.

Field application showed that the optimized method passed through the V-shaped fold in 28 days, achieving a normal advance rate and an average daily advance of approximately 2.4 m. By comparison, the conventional method

achieved an average face advance of only 0.8 m per day, with lower mining efficiency and more frequent equipment failures. Only three travel wheels required replacement during the operation. Compared with the conventional rate of one replacement per day, the optimized method improved mining efficiency and substantially reduced equipment-replacement costs. Table 3 compares the conventional and optimized methods.

Table3 Comparison of traditional and optimized mining technologies

Procedure	Transition start point	Maximum undercut per pass/mm	Maximum shearer pitch angle/°	Time to cross the fold/d	Average daily advance/m	Travel-wheel replacement frequency
Conventional procedure	1-2 m ahead of the fold	200	14	—	0.8	1wheel/d
Optimized procedure	25 m ahead of the fold	70-140-210	≤5	28	2.4	0.1wheel/d

5 Conclusions

(1) The optimal shearer pitch-angle range for safe passage through a V-shaped fold is 5-7°. Operating outside this range increases the risk of equipment wear, failure, and safety hazards.

(2) Floor-undercut transition work should begin 25 m ahead of the fold. The total fold-crossing section is approximately 66 m long. For large-span folds, a sufficiently long transition section is needed to adjust the shearer pitch gradually and allow the longwall equipment to pass through the folded zone safely and smoothly.

(3) Precise control of the shearer's stepwise undercut amounts can reduce wear and failures in key components, including the walking mechanism. This improves face-advance efficiency and the safety of fold-crossing operations.

Funding: This research was funded by the National Natural Science Foundation of China, grant number No. 52664016 and No.52664017, the Natural Science Foundation of Inner Mongolia of China, grant number No. 2026MS0500 and 2025MS05068, and Double First-Class and Characteristic Development Guidance Fund Project.grant number No. YLXKZX-NKD-053.

Acknowledgments: This work was supported by the National Natural Science Foundation of China (Grant No. 52664016 and 52664017), the Natural Science Foundation of Inner Mongolia of China (Grant No. 2026MS0500 and 2025MS05068), and the Double First-Class and Characteristic Development Guidance Fund Project (Grant No. YLXKZX-NKD-053). We thank the academic editors and anonymous reviewers for their kind suggestions and valuable comments.

Availability data and materials: The authors confirm that the data supporting the findings of this study are available within the article.

Conflicts of Interest: The authors declare no conflict of interest.

References

[1] LI Bin, YANG Chunlei, LIU Yong. Rock mechanical properties according to hardness and plasticity coefficient of rock cuttings[J]. Chinese Journal of Underground Space and Engineering, 2005, 1(6): 915-917.

[2] LI Wangtao. Study on cutting characteristics of shearers under different mechanical properties of coal rock[D]. Taiyuan University of Technology, 2023.

[3] LU Zhenguo. Research on cutting fracture characteristics of rock plate with different constraints[D]. Shandong University of Science and Technology, 2014.

[4] Tiry Aki B, Cagaty Dikmen A. Effects of rock properties on specific cutting energy in linear cutting of sandstones by picks[J]. Rock Mechanics and Rock Engineering, 2009, 39(2): 89-120.

[5] Achanti V B, Khair A W. Cutting efficiency through optimized bit configuration-an experimental study using a simulated

continuous miner [J]. Mineral Resources Engineering, 2001, 4(2): 427-434.

[6] LIU Chunsheng, DANG Zhenqian, LIU Yanting, et al. Study on temperature and wear behavior of disc cutter in cutting coal rock[J]. Journal of China Coal Society, 2022.

[7] LIU Songyong. Research on cutting performance of shearer drum and cutting system dynamics[D]. China University of Mining and Technology, 2009.

[8] LIU Chunsheng, REN Chunping, LI Degen. Reconstruction and deduction of cutting coal and rock load spectrum on modified discrete regularization algorithm[J]. Journal of China Coal Society, 2014, 39(5): 981-986.

[9] Muro T, Tran D T. Regression analysis of the characteristics of vibro-cutting blade for tuffaceous rock[J]. Journal of Terramechanics, 2004, 40(1): 191-219.

[10] LIU Chunsheng, REN Chunping, WANG Lei. Model of energy consumption based on conical pick rotary cutting coal rock for cutting thickness[J]. Journal of Heilongjiang University of Science & Technology, 2016, 26(1): 53-57.

[11] WANG Xiang, YANG TingJun, YANG Lin, et al. Study on rock cutability and classification[J]. Coal Engineering, 2011, 5: 77-79.

[12] XU Xiaohe, YU Jing. Rock fragmentation science[M]. Coal Industry Press, 1984.

[13] LI Tonghuan. Research on cuttability of coal based on single pick cutting experiment[D]. China University of Mining and Technology, 2018.

[14] KOU Yuanbao, WANG Chongjian, YUN Ruiguang, et al. Calculation method for specific cutting energy of coal shearer based on data cleaning algorithm[J]. Coal Engineering, 2021, 53(07): 146-150.

[15] CHEN Guohua, WANG Yanliang, WANG Chaoyin, et al. Study on the regulation of mine pressure and prevention technology in the gathering stage of the heading area of the narrow coal pillar along the open-pit tunnel[J]. China Mining Magazine, 2024, 33(03): 219-225.

[16] DOU Linming, CAI Wu, GONG Siyuan, et al. Dynamic risk assessment of rock burst based on the technology of seismic computed tomography detection[J]. Journal of China Coal Society, 2014, 39(2): 238-244.

[17] XIANG Peng, JI Hongguang, KONG Lingrui, et al. Rockburst mechanism analysis based on dynamic loading and unloading effect of two-body systems[J]. Journal of China Coal Society, 2016, 41(11): 2698-2705.

[18] CAI Wu, DOU Linming, LI Zhenlei, et al. Verification of passive seismic velocity tomography in rock burst hazard assessment[J]. Chinese Journal of Geophysics, 2016, 59(1): 252-262.

[19] JING Guangcheng. Stress evolution and rock burst gestation law caused by thick coal seam mining in fold region[D]. China University of Mining and Technology, 2017.

[20] CHEN Guoxiang. Mechanism research of the maximum horizontal stress on rock-burst and its application[D]. China University of Mining and Technology, 2009.

[21] CHEN Weishuai. Study on the precursor information and forecasting indices of pillar-rockburst in fold area[D]. China University of Mining and Technology, 2019.

[22] LIU Zhongzhu. Study on disaster inducing factors and mechanism of impact rock burst in extra thick coal seam in fold structural area[D]. China University of Mining and Technology, 2021.

[23] Cai W, Dou L M, Gong S Y. Quantitative analysis of seismic velocity tomography in rock burst hazard assessment[J]. Nat Hazards, 2015, 75: 2453-2465.

[24] TIAN Chen, YANG Zengfu, LI Jingang. Study on characteristics of mine pressure in large mining height fold zone[J]. Coal Technology, 2024, 43(09): 29-33.

[25] ZHANG Zhihong. Technology for fully mechanized longwall top coal caving mining face crossing over folded structure in Yangquan Mining Area[J]. Coal Science and Technology, 2007, (3): 16-19.