Research Square

Preprints are preliminary reports that have not undergone peer review.
They should not be considered conclusive, used to inform clinical practice,
or referenced by the media as validated information.

Solar Powered Floating Aeration Systems for Mitigating Eutrophication and Improving Lake Water Quality

Shivam Shukla

shivam.shukla269@gmail.con

Thakur Shree DPS College of Engineering & Management

Subhasini Shukla

St.John College of Engineering & Management

Systematic Review

Keywords: Solar-powered aeration, Floating aeration systems, Lake restoration, Dissolved oxygen, Floating photovoltaic, Eutrophication, Fine-bubble aeration

Posted Date: November 24th, 2026

DOI: https://doi.org/10.21203/rs.3.rs-11358310/v1

License: This work is licensed under a Creative Commons Attribution 4.0 International License.
Read Full License

Additional Declarations: No competing interests reported.

Solar Powered Floating Aeration Systems for Mitigating Eutrophication and Improving Lake Water Quality

Dr.Shivam Shukla[a*], Subhasini Shukla[b]

[a]Assistant Professor, Department of Engineering Sciences & Humanities,
Thakur Shree DPS College of Engineering & Management, Vasai, Palghar, Maharashtra, India
Email id-shivam.shukla269@gmail.com

[b]Assistant Professor, Department of Electronics & Computer Science, St. John College of Engineering & Management, Palghar, Maharashtra, India
Email id-subhasini1212@gmail.com

***Corresponding author:** Dr. Shivam Shukla

Abstract

There is a growing threat to aquatic ecosystems and water quality in freshwater lakes due to eutrophication, algal blooms, oxygen depletion, discharges of waste water and many other anthropogenic activities. Aeration is a key physical lake restoration technology since it increases the content of dissolved oxygen (DO), provides water circulation and promotes aerobic biological processes. Conventional aeration systems typically depend on the electricity from the electric power grid and may require high energy consumption, operating cost and maintenance especially in distant and big water bodies. There is an interesting alternative in solar-powered floating aeration systems, which combine the technologies of photovoltaic (PV) energy generation and floating aeration. The review systematically considers the evolution of solar-powered floating aeration systems through pulverizing, Venturi, subsurface diffuser, hybrid and autonomous aeration technologies. The review analyzes floating photovoltaic integration, energy storage, oxygen-transfer efficiency, water circulation, buoyancy, floating-platform stability, environmental impacts and monitoring technologies. The comparative analysis shows advantages and disadvantages of current technologies. Based on revealed research gaps, the Solar-Powered Optimized Floating Aeration System (SPOFAS) concept is introduced, which consists of solar PV, battery storage, fine-bubble aeration, modular multi-pontoon floating platform, sensor-based monitoring and future FEA-based structural validation. The SPOFAS concept gives a basis for renewable energy-based lake restoration, whereas experimental, hydrodynamic, structural and field-scale validation is important future research direction.

Keywords: Solar-powered aeration, Floating aeration systems, Lake restoration, Dissolved oxygen, Floating photovoltaic, Eutrophication, Fine-bubble aeration,

1. Introduction

Freshwater lakes are the natural resources providing drinking water supply, fisheries, agriculture, recreation and ecological balance [1]. However, the rapid urbanization, industrialization, agriculture and waste water discharges cause increasing of pollution and nutrients loading in freshwater systems [2]. Excessive amounts of nitrogen and phosphorus stimulate algal biomass and cause eutrophication and degradation of water quality [3]. As a result of biomass decomposition, there is an oxygen depletion and formation of hypoxic or anoxic conditions, which negatively affects aquatic organisms [4]. Therefore, it is necessary to provide sufficient amount of dissolved oxygen in sustainable lake management [5]. Aeration is the common method to increase the oxygen concentration and water circulation, however, the conventional aeration systems typically use electricity from the electric grid and this reduces applicability of such systems [6].

Many approaches are developed to improve aeration of freshwater lakes [7]. Such technologies as surface aerators, mechanical mixers, Venturi systems and diffused air systems are widely used to increase the oxygen transfer and water circulation [8]. Solar-powered aeration systems can serve as an alternative for aeration of water bodies using photovoltaic energy to drive pumps, compressors and aerators instead of the conventional electricity [9]. Floating PV systems are particularly interesting since they use the available water surface and do not require additional land [10]. The combination of floating PV with aeration can provide both renewable energy generation and water-quality improvement in-situ [11]. However, there are many problems related to such systems, including intermittence of solar energy, the requirement of battery storage, high complexity and maintenance difficulties [12]. The floating platform should resist the forces of the wind and waves while providing the sufficient stability [13].

Moreover, there are negative impacts associated with large-scale deployment of floating PV systems on light penetration, water temperature, stratification, evaporation and aquatic habitats [14]. Intelligent monitoring technologies based on the sensors, IoT and automation were improved to monitor continuously dissolved oxygen and other water-quality parameters and thus improve aeration performance [15]. However, the existing researches are usually focused on separate investigation of renewable energy generation, aeration efficiency, structural

stability, environmental impact and intelligent monitoring technologies [16]. Thus, the proposed Solar-Powered Optimized Floating Aeration System (SPOFAS) integrates solar photovoltaic energy generation, floating aeration, real-time water quality monitoring and optimization into one platform [17]. This system aims to increase the DO, minimize the dependence on the electricity from the grid, reduce energy consumption and provide sustainable approach for freshwater lake restoration [18].

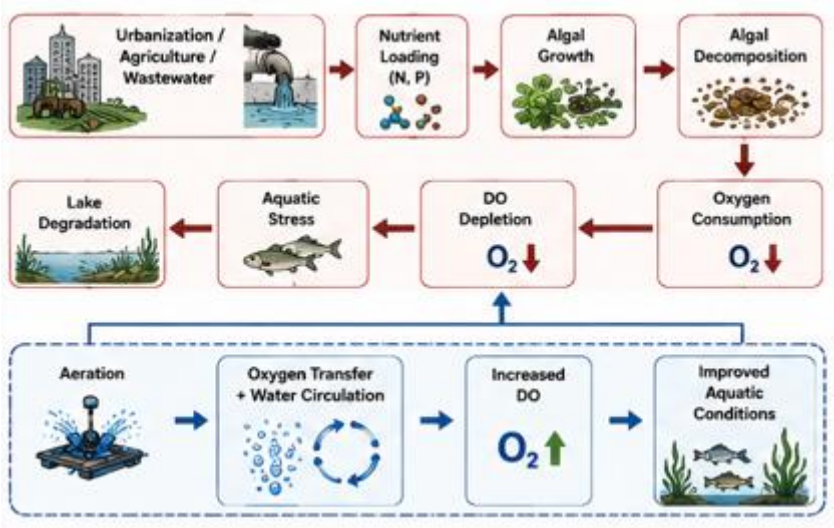

Figure 1: Relationship between Lake Eutrophication, Dissolved Oxygen Depletion, and the Need for Aeration

1.1 Objectives and Scope

The development of solar-powered floating aeration systems is necessary for sustainable, energy-efficient and environmentally friendly freshwater lake restoration [19].

- Investigation of different solar-powered aeration technologies and their operation principles.
- Comparison of the advantages, disadvantages and energy requirements of existing aeration systems.
- Investigation of the integration of floating photovoltaic (PV) systems with aeration technologies.
- Evaluation of oxygen-transfer efficiency and overall aeration performance.
- Investigation of solar energy generation, storage and energy management.
- Taking into account structural stability and design requirements of floating platform.

- Assessment of environmental impacts of floating PV and aeration on aquatic ecosystems.
- Identification of major technological, energy, structural and environmental research gaps.
- Identification of key parameters for evaluation of system performance.
- Introduction of the integrated SPOFAS concept.
- Consideration of the possible applications of modular SPOFAS units in urban and remote freshwater lakes.
- Identification of the necessity of experimental, CFD, FEA and field-scale validation of proposed system.

2. Importance of Aeration in Freshwater Lake Restoration

Aeration is significant for the restoration of lakes suffering from oxygen depletion. Oxygen is vital for fish, microbes, and other aquatic life. Besides, it is necessary for aerobic biological processes. A low oxygen level leads to the development of anaerobic conditions, affecting the quality of water and aquatic ecosystems [20].

Aeration intensifies the interaction between air and water and was enhances oxygenation from the atmosphere into the water layer. Depending on the type of aerator, it can create water circulation and mixing that distributes oxygen from rich areas to poor ones. Thus, aeration does not imply only the rise of DO in one particular area but improves the whole oxygen distribution in the water body.

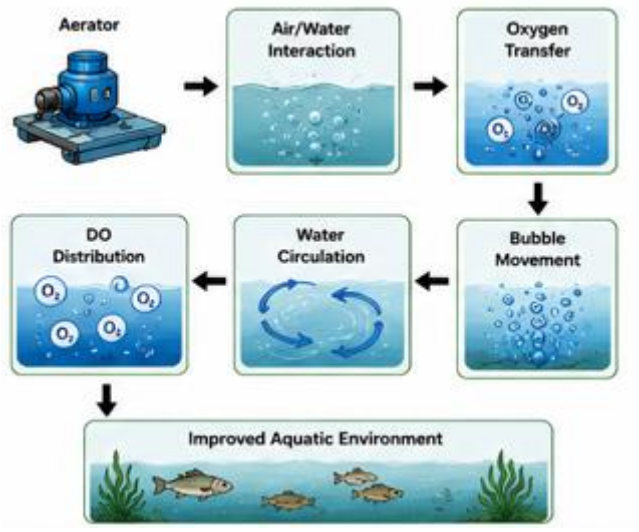

Figure 2: Role of Aeration in Dissolved Oxygen Enhancement and Water Circulation

2.1 Conventional Lake Restoration Approaches

Lake restoration includes biological, chemical, and physical methods. Biological restoration is connected with the use of microbes or ecosystem interventions to decrease the load of organic matter and nutrients. Chemical restoration involves the reduction of nutrients through precipitation and algae. Physical methods are associated with the removal of organic matter through dredging and aeration.

Among these methods, aeration is advantageous because it aims to increase DO levels. The efficiency of aeration depends on the depth of water, the kind of aerator, oxygen transfer efficiency, energy consumption, and circulation features. Conventional electrically driven aeration systems are costly in case of long-term application and cannot be used in remote areas.

Table 1: Comparison of Conventional Lake Restoration Approaches

Method	**Main principle**	**Major advantage**	**Major limitation**	**Suitability**
Biological	Biological/ecological treatment	Environmentally compatible	Relatively slow	Nutrient/organic pollution
Chemical	Nutrient/algal control	Rapid response	Chemical/ecological concerns	Eutrophic lakes
Dredging	Sediment removal	Removes nutrient-rich sediment	High cost	Severely polluted lakes
Mechanical mixing	Water circulation	Reduces stagnant zones	Energy requirement	Lakes/reservoirs
Surface aeration	Air-water interaction	Simple operation	Surface disturbance	Oxygen-deficient water
Diffused aeration	Fine-bubble oxygen transfer	Good oxygen distribution	Diffuser maintenance	Lakes/deeper water

3. Intelligent Monitoring, Energy Management and Optimization of Solar-Powered Aeration Systems

3.1 Dissolved Oxygen Monitoring and Aeration Control

A basic element for efficient lake aeration includes monitoring of dissolved oxygen (DO), which used to assess oxygen-deficient condition as well as the need for operation of aerators.

Pratama *et al.* (2024) designed water quality monitoring system coupled with the solar energy powered aerator for vannamei shrimp ponds. The system monitors the levels of pH, temperature, and total dissolved solids (TDS) using the website and Android applications. The temperature and TDS were in the right range, while the pH levels were in the poor range for the ponds, which allowed farmers to properly control the water quality in ponds [21].

Cagle *et al.* (2025) investigated the effects of floating solar photovoltaic (FPV) installations on waterbodies. From the results obtained, it was noted that FPV system cooled down the water temperature by 0.53 °C on average and cooled down to 2 °C during summer, reducing the levels of dissolved oxygen. The results have shown the possibility of the use of FPV system to minimize water warming in aquatic ecosystems [22].

Prandini *et al.* (2025) investigated the environmental impacts of floating photovoltaic (FPV) system installed in the water supply reservoir. Their research focused on monitoring key parameters such as water temperature, dissolved oxygen, and photosynthetically active radiation beneath the FPV installation. The research also examined the microclimate formed between the solar modules and the water surface, emphasizing the importance of understanding how FPV systems interact with reservoir conditions and aquatic environments [23].

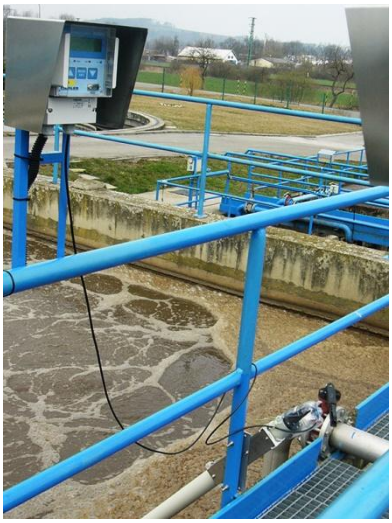

Figure 3: Dissolved Oxygen Monitoring and Aeration Control

3.2 Solar Energy and Battery Management

The proper use of solar-powered aeration technology is dependent on generation of solar energy and management of the batteries so that the power supply remains constant despite variations in solar availability.

Woolway *et al.* (2024) assessed the potential of floating solar photovoltaic (FPV) systems throughout the globe. More than a million water bodies around the world were studied for their capacity to generate energy. The research results illustrate that FPV systems provide significant power for electricity consumption and alleviate the pressure on land use, shedding light on the possibility of their application in the field of renewable energy development and national decarbonization [24].

Qu *et al.* (2025) developed a hybrid aerator that helps save energy by using solar and otherwise generated power for aquaculture. The system enabled to optimize the speed of aerators and the depth of impellers to improve the transfer of oxygen and lower the energy expenditure. The method increased the effectiveness of aerobic operation while keeping oxygen dissolved in water in the necessary amounts. The hybrid system also cut down electricity use and provided for the creation of energy-saving and low-carbon technologies in the field of aquaculture [25].

3.3 Sensor-Based Monitoring and IoT Integration

Sensor technologies and IoT connectivity provide monitoring of the quality of water and operational conditions of the systems, thus facilitating remote control and aeration management.

Malisaba *et al.* (2025) examined solar-powered IoT water quality monitoring systems for off-grid applications. The research was concerned with sensing technology, IoT architecture, power supply, communication methods, and machine learning techniques. The authors stressed the necessity of considering such parameters as pH, turbidity, temperature, electric conductivity, and dissolved oxygen and mentioned the problems with energy-aware sampling, sensors integration, and long-term operation [26].

Mentzafou *et al.* (2025) investigated the environmental impact of the floating photovoltaic (FPV) systems in Kremasta Lake (Greece). The research investigated the water quality parameters (temperature, dissolved oxygen, chlorophyll-a, and nutrients). The results showed

only limited effects of FPV systems on their vicinity and insignificant influence on water quality. The authors pointed out that FPV system are an effective option for renewable energy solutions for artificial reservoirs [27].

3.4 Optimization of Aeration Operation

The optimization of aeration operation involves determining optimum operating conditions based on dissolved oxygen levels, solar energy availability, battery charging status, and qualities of water that increase energy efficiency in aeration operation.

N. Ravichandran and B. Paneerselvam (2025) developed a machine learning-based model to evaluate the simultaneous influence of climate change and Floating Photovoltaic (FPV) systems on lake water quality. The study was focused on predicting water temperature and water quality parameters including dissolved oxygen. The model is useful in assessing the environmental effects of the FPV systems and ensuring sustainable management of surface water of lakes [28].

Y. Song et al. (2026) investigated the impact of the Floating Photovoltaic (FPV) coverage on water quality and turbulence in mining subsidence waters by numerical simulation. The research focused on water temperature, dissolved oxygen, concentrations of major solutes, chlorophyll-a, and turbulent kinetic energy. The results show that FPV coverage influences aquatic environmental conditions and phytoplankton dynamics, thus contributing to sustainable FPV projects [29].



Figure 4: Aeration Operation

4. Solar-Powered Floating Aeration Technologies

Solar-powered floating aerators refer to a collection of renewable electrical energy generators and the aerator installed on a floating platform or directly connected to it. The principle of this technology involves conversion of solar energy to electrical energy and utilizing the obtained energy for driving the aerator, pump, compressor, or any similar water moving equipment [30].

Numerous aeration methods have been studied, including pulverizing aerators, Venturi aerators, submerged diffuser systems, a hybrid system, and autonomous systems. The efficiency of these methods differs because of distinctions in oxygen transfer method, electricity consumption, water depth, mixing capacity, and design of the floating platform.

4.1 Pulverizing Aerators

Pulverizing aerators are responsible for improving oxygen uptake due to the fragmentation of water into droplets or sprays. Smaller droplets create more interaction surface for water and air and increase the oxygen uptake. The advantage of these systems is that they can operate using solar electricity without depending on the grid.

The main strengths of this equipment are strong interaction between the air and water and possible high oxygen uptake efficiency; however, these systems require much energy and their performance may be affected by wind or waves.

4.2 Venturi Aerators

The Venturi aerators function by means of the pressure difference formed due to water running through a narrow section of the pipe. The pressure drop creates a low-pressure area which allows air to be sucked into the water flowing through the aerator.

This technology has a simple hydraulic design making it suitable for small applications. However, its effectiveness is highly dependent on flow conditions and pressure levels.

4.3 Subsurface Diffuser Aerators

The subsurface diffuser aerators inject air into the water through the diffusers producing small bubbles which help create a huge interfacial area between water and air.

This technology makes it effective for lake restoration practices because oxygen is supplied below the surface with bubbles helping to improve vertical mixing of water. Thus, the suggested SPOFAS system uses subsurface diffuser aeration as the main method of aeration.

4.4 Hybrid Aeration Systems

Hybrid systems combine two or more aeration mechanisms or integrate aeration with additional water-treatment technologies. Such systems was provide greater operational flexibility but generally increase system complexity.

4.5 Autonomous Floating Aeration Systems

Autonomous platforms combine floating structures with sensors, control systems, renewable energy, and sometimes robotic mobility. Such systems was monitor water quality and potentially change their operating position or aeration strategy according to environmental conditions.

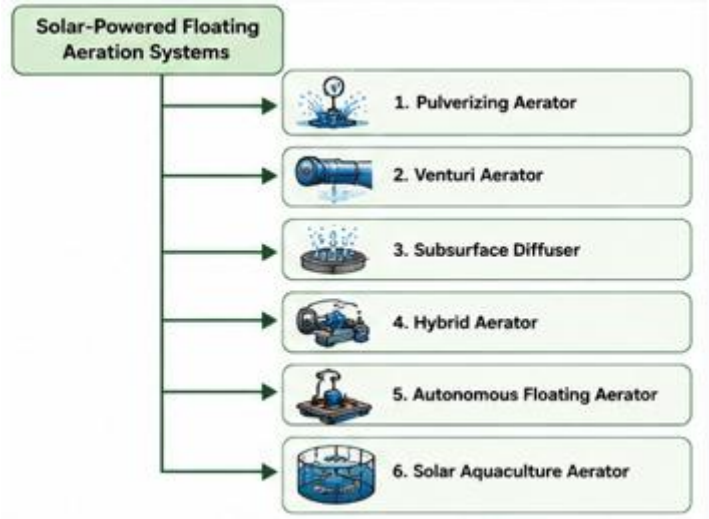

Figure 5: Classification of Solar-Powered Floating Aeration Technologies

Table 2: Comparison of Solar-Powered Floating Aeration Technologies

Technology	Aeration principle	Energy source	Main application	Major advantage	Major limitation
Pulverizing aerator	Water atomization	Solar PV	Lake restoration	High air-water contact	Energy requirement

Venturi aerator	Pressure-driven air entrainment	Solar PV	Lakes/aquaculture	Simple hydraulic operation	Flow dependent
Subsurface diffuser	Fine-bubble diffusion	Solar PV	Lake restoration	Good oxygen distribution	Diffuser maintenance
Hybrid aerator	Combined mechanisms	Solar PV	Water-quality improvement	Flexible operation	Higher complexity
Autonomous platform	Mobile oxygenation	Solar PV	Aquatic restoration	Monitoring and mobility	Higher cost
Aquaculture aerator	Mechanical/air aeration	Solar PV	Fish farming	Renewable operation	Application specific

5. Floating Photovoltaic Integration for Lake Restoration

Floating photovoltaic arrays utilize floating platforms to hold solar panels on water bodies. They generate renewable energy without having to install solar systems on land, while temperature of solar panels when operating on water usually decreases. However, the degree of this effect is dependent on location and the type of system [31].

FPV systems operate in conjunction with aerators in such a way that the electricity generated by deriving solar energy is used by aerator machinery or charged to a battery, which can be used later. This is extremely beneficial in the areas with no or expensive electricity from promising solutions.

5.1 Solar Energy Generation

The electrical energy generated by a PV system is represented conceptually as:

$E_{PV} = A \times G \times \eta$ (1)

Where E_{PV} is the generated energy (Wh), A is the PV area (m²), G is solar irradiance (W/m²), and η is PV conversion efficiency.

Actual energy production depends on solar radiation, module efficiency, temperature, shading, panel orientation, and system losses.

5.2 Battery Storage

Because solar energy is intermittent, battery storage supports aerator operation during low-solar or nighttime periods. Battery energy is estimated using:

$E_{bat} = V \times Ah$ (2)

Where E_{bat} is battery energy (Wh), V is battery voltage (V), and Ah is battery capacity (Ah).

Battery sizing should consider aerator power demand, operating duration, solar availability, depth of discharge, and system efficiency.

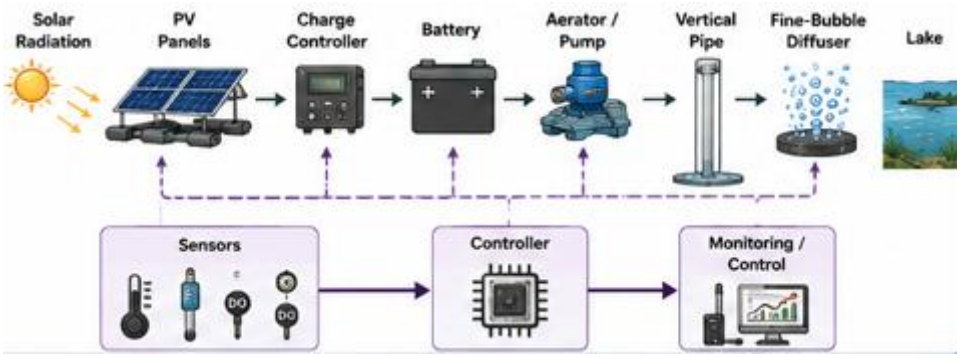

Figure 6: Floating Photovoltaic-Integrated Solar Aeration System

Table 3: Advantages and Potential Environmental Impacts of Floating Photovoltaic Systems

Aspect	Potential benefit	Potential concern
Land use	Reduces land requirement	Occupies water surface
Energy generation	Renewable electricity	Solar intermittency
Panel temperature	Possible water-cooling effect	Site dependent

Aeration integration	Direct renewable power	Additional infrastructure
Water evaporation	Potential reduction	Requires site-specific assessment
Aquatic ecosystem	Possible restoration benefits	Light and habitat changes
Large-scale deployment	High energy potential	Ecological uncertainty

6. Performance Evaluation of Solar-Powered Floating Aeration Systems

A comprehensive evaluation of solar-powered aeration requires more than measuring the aerator flow rate. Oxygen transfer, energy consumption, water circulation, buoyancy, and structural safety should also be considered.

6.1 Dissolved Oxygen Enhancement

DO is the most important water-quality indicator for evaluating aeration. Measurements should ideally be collected before, during, and after aeration at different depths and locations. This provides information about both temporal and spatial oxygen distribution.

6.2 Oxygen Transfer Rate

The oxygen transfer rate (OTR) represents the amount of oxygen transferred from air to water per unit time and expressed as:

$$OTR = k_L a(C_s - C) \quad (3)$$

Where, $k_L a$= volumetric oxygen transfer coefficient (s^{-1}), C_s= saturation dissolved oxygen concentration (mg/L) and C= existing dissolved oxygen concentration in water (mg/L). The value of $k_L a$ is influenced by bubble characteristics, water temperature, diffuser design, air flow, and mixing conditions.

6.3 Standard Oxygen Transfer Rate

The standard oxygen transfer rate (SOTR) under standard conditions is calculated as:

$$SOTR = k_L a_{20} \times V \times (C_{20}^* - C_0) \quad (4)$$

Where V= volume of water (m^3), C_{20}^*= saturation oxygen concentration at 20°C and C_0= initial dissolved oxygen concentration.

6.4 Standard Aeration Efficiency

The standard aeration efficiency (SAE), which represents oxygen transfer per unit power consumption, is expressed as:

$$SAE = \frac{SOTR}{P} \quad (5)$$

Where, P= power consumption of the aeration system (kW).

6.5 Water Circulation

Water circulation is another important parameter because oxygen introduced at one location should be distributed through the water column. Flow rate, circulation velocity, mixing volume, and reduction of stagnant zones were used to evaluate circulation.

6.6 Buoyancy and Floating Stability

The buoyancy force is:

$$F_b = \rho g V \quad (6)$$

Where water density (kg/m³) isρ, g is gravitational acceleration (m/s²), and V is displaced water volume (m³).

A basic vertical flotation condition is:

$$F_b > W \quad (7)$$

Where W represents total system weight. In practical design, additional stability criteria are required because wind, waves, and uneven loading was affect platform behaviour.

6.7 Structural Performance

Structural evaluation should consider total deformation, equivalent stress, strain, and factor of safety. For a three-dimensional stress state, Von Mises stress was expressed as:

$$\sigma_v = \sqrt{\frac{(\sigma_1-\sigma_2)^2+(\sigma_2-\sigma_3)^2+(\sigma_3-\sigma_1)^2}{2}} \quad (8)$$

and

$$FOS = \frac{\sigma_y}{\sigma_v} \quad (9)$$

Where σ_y is material yield strength and σ_v is Von Mises stress.

Table 4: Performance Parameters for Solar-Powered Floating Aeration Systems

Performance parameter	**Expression/measurement**	**Unit**	**Purpose**
Dissolved oxygen	Before/after DO	mg/L	Water-quality improvement
OTR	$k_l a(C_s - C)$	kg O_2/h	Oxygen-transfer capability
SOTR	Standard OTR	kg O_2/h	Standard comparison
SAE	SOTR/P	kg O_2/kWh	Energy efficiency
PV energy	AGη	Wh	Renewable generation
Battery energy	V × Ah	Wh	Energy storage
Buoyancy	ρgV	N	Floating capability
Stress	Von Mises stress	MPa	Structural safety
Deformation	FEA output	mm	Structural response
FOS	σ_γ/σ_v	—	Safety assessment

Table 5: Comparative performance metrics of solar-powered aeration systems and the proposed floating aeration system.

System	**PV Capacity (Wp)**	**Battery Capacity (kWh)**	**Flow Rate (m^3/h)**	**Oxygenation Function**	**Platform Type**

Venturi Aerator [6]	300	1.2	12	Venturi aeration	Semi-floating
Pulverizing Aerator [2]	1980	4.8	15	Pulverizing aeration	Floating
Hybrid Aerator [1]	1500	3.5	25	Hybrid aeration	Floating platform
NEPTUNE-R [8]	500	2.0	30	Oxygenation and purification	Floating robotic platform
Fishery Aeration System [20]	400	1.5	10	Fishery aeration	Floating platform
Proposed Solar Aerator (SPOFAS)	80–100 W/module (≈400–500 total)	1–5	20–80	Fine-bubble aeration	Multi-pontoon floating platform

7. Floating Platform Design and Structural Considerations

The floating platform is a central component of the proposed system that carries PV modules, batteries, aeration appliances, sensors, and structural parts. The floating platform designed for that system should give it enough buoyancy and stability under environmental loads [32].

Multi-pontoon or catamaran-type configuration is proposed to ensure load distribution and improved buoyancy of the floating platform. The PV module is mounted on an elevated frame, while aeration appliances are below the water surface.

7.1 Buoyancy and Load Distribution

The platform should provide buoyancy for:

- The floating system.
- PV modules.
- Batteries.

- Aeration appliances.
- Sensors.
- Frame.
- Cables and accessories.

The floating platform should be designed with enough freeboard to avoid water entering into the internal compartments.

7.2 Environmental Loading

The platform may experience:

- Wind load.
- Wave loading.
- Water current.
- Uneven equipment loading.
- Mooring forces.
- Solar-panel loading.

Therefore, structural design should not depend only on static self-weight.

7.3 Material Selection

PVC and HDPE were considered for pontoons because of their corrosion resistance and buoyancy characteristics. Aluminium was used for lightweight structural frames, while mild steel was provide higher structural strength but requires appropriate corrosion protection.



Figure 7: Conceptual CAD Configuration of the Proposed Multi-Pontoon SPOFAS Platform

Table 6: Preliminary Design Parameters of the Proposed SPOFAS

Parameter	**Preliminary design range**
Platform configuration	Multi-pontoon/catamaran
Pontoon diameter	150–200 mm
Pontoon length	1–1.2 m
Frame	Rectangular welded frame
Frame elevation	Approximately 300 mm
PV capacity	80–100 W/module
PV inclination	10–15°
Battery capacity	1–5 kWh
Aeration method	Fine-bubble diffuser
Aeration depth	Approximately 1 m
Pipe diameter	40–50 mm
Flow rate	20–80 m^3/h
Freeboard	100–150 mm

Pontoon material	PVC/HDPE
Frame material	Aluminium/mild steel
Configuration	Modular/scalable

8. Gap in the Study

Several knowledge gaps in research regarding solar-powered floating aeration systems have restricted their use in restoration procedures for freshwater lakes. While certain aeration systems, floating photovoltaic energy systems, energy storage systems, energy-management techniques, and monitoring systems offer great prospects, they operate under different conditions and the results of applications cannot be compared. In addition, the process can be affected by intermittent nature of energy, the need in batteries, and absence of energy management that can ensure the work of aerators. Moreover, there have been few studies of the entire floating platform with regard to the effect of wind, wave, buoyancy, mooring, and specific equipment. Also, the analysis has not been integrated into the process and does not consider such factors, as dissolved oxygen level, temperature, pH, solar radiation impact and battery state. Additionally, the ecological implications of PV floating floating coverage need more studies. Various factors, such as spacing, depth of water, and presence of circulation zones must also add complexity in the process of expanding floating aeration systems from small ponds to big lakes. To address these limitations, future research should focus on developing an integrated SPOFAS system that combines optimized aeration, renewable-energy management, structural analysis, intelligent monitoring, environmental assessment, and scalable modular design. Such an integrated approach would improve system efficiency, reliability, sustainability, and practical applicability for freshwater lake restoration.

9. Potential Application to Urban Lake Restoration

9.1 Case Study 1: Bellandur Lake, Bengaluru

Bellandur Lake serves as a prominent instance of a human-operated freshwater ecosystem suffering from negative impacts from pollution, introduction of nutrients, algal growth and water quality decline. The big size of the lake can help to employ widespread techniques for rehabilitation.

With the use of modular SPOFAS technologies, local oxygenation and water movement can be achieved. The sites for placing a number of units should be selected taking into account water depth and hydrodynamics of the region, pollution zones and DO levels.

However, practical implementation cannot be derived from the general findings only. It is necessary to hold some surveys for water quality, hydrodynamic studies, assessments of environmental impact, and the mooring conditions.



Figure 8: Conceptual SPOFAS Deployment Strategy for Bellandur Lake

9.2 Case Study 2: Powai Lake, Mumbai

Powai Lake is another freshwater lake in an urban setting that has been impacted by nutrient pollution, sediment buildup, and human activities. The utilization of solar aeration might create an opportunity to enhance oxygen levels while providing an alternative to electrical energy. SPOFAS' modular design permits individual modules to be placed at different sites. The solar-powered aerators can work in a variety of sunlight while the battery has energy to run the aerator during times of suboptimal energy production.



Figure 9: Conceptual SPOFAS Deployment Strategy for Powai Lake

10. Conclusion

Solar-powered floating aeration systems is a possible way of restoring freshwater lakes through sustainably produced renewable energy. There are different types of aeration systems used, such as pulverization, Venturi, sub-surface diffusion, hybrid systems, autonomous systems. These aeration technologies have their own pros and cons in relation to oxygen transfer, energy consumption, operating complexity and scalability. Floating solar PV installations are a proper source of renewable energy to be used in places with insufficient electrical infrastructure buildings. Nevertheless, there are some challenges, such as the issue of solar intermitted working, battery needs, floating-platform reliability and possible environmental problems. Based on the identified research gaps, the developed SPOFAS system introduces solar PV, battery storage, fine-bubble aeration, modular multi-pontoon floating platform, sensor-based observation, and future FEA structural optimization. The newly introduced framework presents a novel opportunity of combining renewable energy solutions with technology of lake restoration. However, the preliminary design parameters should be verified on the experimental level through development of a prototype and conducting FEA and CFD simulations as well as environmental examination.

11. Future Research Directions

To improve the performance, reliability, and practical applicability of the proposed SPOFAS framework, future research should focus on the following initiatives [33]:

- Develop and test a physical prototype to evaluate buoyancy, platform stability, aerator operation, PV generation, battery performance, and sensor functionality.
- Conduct laboratory experiments to measure dissolved oxygen improvement, oxygen-transfer rate, water circulation, energy consumption, and overall aeration efficiency.
- Apply CFD and hydrodynamic analysis to investigate bubble movement, water circulation, velocity distribution, oxygen transport, and mixing behaviour.
- Perform FEA-based structural analysis to evaluate stress, deformation, wind loading, wave loading, mooring forces, and factor of safety.
- Integrate intelligent monitoring using dissolved oxygen, temperature, pH, turbidity,

solar irradiance, and battery sensors for condition-based aerator operation.

- Conduct techno-economic analysis considering initial investment, PV and battery costs, aerator cost, maintenance, replacement, operating savings, and life-cycle cost.

- Evaluate the long-term environmental effects of floating PV and aeration on light penetration, water temperature, aquatic vegetation, biodiversity, thermal stratification, and overall ecological response.

12. Declarations

Funding: The authors declare that no funds, grants, or other financial support were received during the preparation of this manuscript.
Clinical Trial Number: Clinical trial number: not applicable.
Conflict of Interest: The authors declare no competing interests.
Ethics, Consent to Participate, and Consent to Publish declarations: Not applicable.
Data Availability: Not applicable.

References

[1] Lerminiaux, J., Norton, B., Wilson, R. J., Rimas, R., Lavender, T. M., & Finlay, K. (2024). Effects of aeration on water quality in agricultural reservoirs in the northern Great Plains. *Lake and Reservoir Management*, *40*(3), 264-284.

[2] Bryant, L. D., Brockbank, N., & Austin, D. (2024). To mix or not to mix? A holistic approach to stratification-preserving and destratification aeration of drinking-water supply reservoirs. *Water Research*, *261*, 121974.

[3] Chaaya, F., Miller, B., Gordos, M., Tamburic, B., & Felder, S. (2025). Artificial destratification options for reservoir management. *Science of the Total Environment*, *967*, 178738.

[4] Thant, K. J. W., Thew, P., Pera, J., Baumgartner, L. J., Dallimore, C., & Seneviratha, L. (2026). Engineering evaluation of hypolimnetic aeration using AEM3D for water-quality improvement in a stratified drinking-water reservoir. *Journal of Water Process Engineering*, *92*, 110686.

[5] Rueda, F. J., Ramón, C. L., & Schladow, S. G. (2025). The hydrodynamic, thermodynamic, and mixing impacts of floating photovoltaics on the surface of a lake. *Water Resources Research*, *61*(9), e2025WR039917.

[6] Rahaman, M. A., dos Santos, F. R., Centenaro, S. H., Fekih, A., Wiecheteck, G., & Chambers, T. L. (2025). Sustainability assessment of floating photovoltaic (FPV) system: A multidimensional comprehensive analysis across the water-energy nexus. *Journal of Cleaner Production*, *506*, 145468.

[7] Sitranata, J. S., Teng, J. G. C., Prasetya, I. H., Yesmaya, V., Tanuar, E., Nafi'ah, R., & Azizan, S. A. (2025). Aqualyze: Smart Monitoring Water Quality through IoT-Enabled Sensors in RAS. *Procedia Computer Science*, *269*, 502-511.

[8] Chavhan, N., Bhattad, R., Khot, S., Patil, S., Pawar, A., Pawar, T., & Gawli, P. (2025). APAH: An autonomous IoT driven real-time monitoring system for Industrial wastewater. *Digital Chemical Engineering*, *14*, 100217.

[9] Sangkaphet, P., Chansiri, N., Kaewklom, C., Chaleamwong, B., Wonglamai, P., Chinnachot, P., & Makdee, S. (2026). The Development and Field Evaluation of an IoT–LoRa-Based Water-Quality-Monitoring and Aeration-Actuation System for Tilapia Cage Farming. *Applied Sciences*, *16*(11), 5308.

[10] Kelestemur, G. T., Aytac, A., & Tuna, M. C. (2024). Experimental investigation on oxygenation efficiency of an effective aeration system for ponds. *Aquaculture International*, *32*(6), 8631-8647.

[11] Koli, A. A., Sadawarte, R. K., Chavan, B. R., Mulye, V. B., Dhamagaye, H. B., Sadawarte, V. R., ... & Ramteke, S. U. (2024). Evaluating the efficiency and economic feasibility of Solar Aeration System. *Journal of Experimental Zoology India*, *27*(1), 855.

[12] Yu, G., Zhang, S., Chen, X., Li, D., Li, W., & Wang, Y. (2024). Numerical investigations on dissolved oxygen field performance of octagonal culture tank based on computational fluid dynamics. *Computers and Electronics in Agriculture*, *218*, 108737.

[13] Jiang, H., Tong, C., & Li, Z. (2026). Optimized Design of a Water-Pushing Aeration System for Flow-Through Aquaculture Tanks. *Aquacultural Engineering*, 102798.

[14] Akomea-Ampeh, M., Atekwana, E. A., Steele, E. P., Cagle, A. E., Armstrong, A., Thackeray, S. J., ... & Hernandez, R. R. (2025). Metal contaminant risk at active floating photovoltaic sites and future research roadmap. *Journal of Environmental Management*, *383*, 125216.

[15] Li, Y., Zhou, M., & Yan, F. (2026). A Triangular Fuzzy Number-Based Water Quality Assessment Model for Evaluating the Impacts of Floating Photovoltaic Projects on Reservoir Water Quality Under Uncertainty. *Water*, *18*(13), 1593.

[16] Leischner, F., Mietzel, T., Gerner, N., & Heldt, S. (2026). A comparison between low-cost single-parameter IoT sensors and traditional high-cost monitoring stations for stream water quality assessment. *Environmental Technology & Innovation*, 104788.

[17] Osuch, A., Osuch, E., & Rybacki, P. (2024). Performance Analysis of a Solar-Powered Pulverizing Aerator. *Energies*, *17*(24), 6321.

[18] Mahdaviarab, A., Wang, H., Wang, X., & Liu, Z. (2026). Solar-powered and self-guided floating electrochemical treatment platform for improving water quality of animal wastewater lagoons. *Journal of Water Process Engineering*, *87*, 110107.

[19] Salalila, A. L., Martinez, J. J., Elsinghorst, R., Hou, H., Saad, M., & Deng, Z. D. (2025). A Real-Time Cloud-Based Modular Water Quality Monitoring System Using a Remotely Operated Vehicle With Integrated Environmental Sensors. *IEEE Journal of Oceanic Engineering*.

[20] Lu, H. L., Chang, Y. H., Chuang, T. F., Chen, S. R., & Wu, Z. D. (2025). Enhancing water quality and sustainable resource utilization through an AIoT-enabled intelligent circular agriculture system. *Journal of Environmental Chemical Engineering*, 119542.

[21] Pratama, I. P. E. W., Kusuma, F. A., Mujiyanti, S. F., Schirhagl, R., & Nanta, T. L. (2024). Solar-based aerator with water quality monitoring in vannamei shrimp pond. *International Journal of Electrical and Computer Engineering*, *14*(5), 5048-5054.

[22] Cagle, A. E., Narwold, B. P., Sadro, S., Armstrong, A., Pasquale, G., Di Blasi, M. L. V., & Hernandez, R. R. (2025). Floating photovoltaic solar energy decreases water temperature and near-surface dissolved oxygen. *Environmental Research: Infrastructure and Sustainability*, *5*(4), 045004.

[23] Prandini, M. K., Bueno, R. D. C., Rigotti, J. A., Bleninger, T., Mannich, M., & Novak, L. H. (2025). High frequency monitoring for impact assessment of temperature, oxygen and radiation in floating photovoltaic system. *Scientific Reports*, *15*(1), 19719.

[24] Woolway, R. I., Zhao, G., Rocha, S. M. G., Thackeray, S. J., & Armstrong, A. (2024). Decarbonization potential of floating solar photovoltaics on lakes worldwide. *Nature Water*, *2*(6), 566-576.

[25] Qu, Z., Tian, C., Che, X., Han, M., & Zhou, Y. (2025). Development and multi-objective optimization of a solar-powered hybrid aerator for aquaculture. *Aquacultural Engineering*, 102608.

[26] Malisaba, J., Barah, O. O., Onep, S. G., Mushabe, D., & Ninsiima, E. (2026). Solar-powered multi-contaminant detection for real-time water quality monitoring. *npj Clean Water*.

[27] Mentzafou, A., Dimitriou, E., Karaouzas, I., & Zogaris, S. (2025). Impact assessment of floating photovoltaic systems on the water quality of Kremasta Lake, Greece. *Hydrology*, *12*(4), 92.

[28] Ravichandran, N., & Paneerselvam, B. (2025). Machine Learning-Based Framework to Predict the Combined Effects of Climate Change and Floating Photovoltaic Systems Installation on Water Quality of Open-Water Lakes. *Sustainability*, *17*(4), 1696.

[29] Song, Y., Zhao, G., Gao, Y., Duan, J., Kong, L., & Chen, X. (2026). Effects of floating photovoltaic on aquatic environment and turbulence and the response of phytoplankton. *Solar Energy*, *312*, 114593.

[30] Jayraj, P., Sahoo, S., Jana, P., & Prem, R. (2025). CFD optimised solar powered IoT integrated paddlewheel aerator for sustainable shrimp farming–A review. *Aquacultural Engineering*, *111*, 102583.

[31] Nobre, R., Rocha, S. M., Healing, S., Ji, Q., Boulêtreau, S., Armstrong, A., & Cucherousset, J. (2024). A global study of freshwater coverage by floating photovoltaics. *Solar Energy*, *267*, 112244.

[32] Kumar, G. R., & Sushama, C. (2025). An IoT-Enabled Smart Water Quality Monitoring System Using Low-Cost Sensors and Cloud Analytics. *International Journal of Emerging*

Research in Science, Engineering, and Management, *1*(5), 07-12.

[33] Bredeweg, E. M., Arismendi, I., Murphy, C. A., & Henkel, S. K. (2025). Modeling diverse environmental responses of reservoirs to floating photovoltaic systems. *Limnologica*, 126293.