Research Square

Preprints are preliminary reports that have not undergone peer review.
They should not be considered conclusive, used to inform clinical practice,
or referenced by the media as validated information.

Development and Experimental Evaluation of an IoT-Based Multi-Point Thermal Monitoring System for an R134a Domestic Refrigeration System

Johnson Felix Eiche

jf.eiche@oaustech.edu.ng

Olusegun Agagu University of Science and Technology

Bukola Olalekan Bolaji

Federal University Oye Ekiti

Olatunde Ajani Oyelaran

Federal University Oye Ekiti

Research Article

Keywords: Internet of Things (IoT), ESP32 microcontroller, smart refrigeration, thermal monitoring, temperature and humidity sensing, cloud-based monitoring, refrigeration system diagnostics

Posted Date: August 27th, 2026

DOI: https://doi.org/10.21203/rs.3.rs-10636766/v1

License: This work is licensed under a Creative Commons Attribution 4.0 International License. Read Full License

Additional Declarations: No competing interests reported.

Abstract

The increasing demand for efficient and reliable refrigeration systems has created the need for advanced monitoring approaches capable of providing detailed information on system thermal behaviour. Conventional refrigeration monitoring methods often rely on limited measurement locations, which may not adequately capture temperature variations across individual components. This study presents the development and experimental evaluation of an Internet of Things (IoT)-based multi-sensor monitoring system for real-time thermal and humidity assessment of a domestic R134a refrigeration system. The developed system integrates an ESP32 microcontroller, seven DS18B20 digital temperature sensors, a DHT22 temperature-humidity sensor, a TFT display interface, and the ThingSpeak cloud platform for local visualization and remote data monitoring. The system was experimentally evaluated on a 1 HP domestic vapour compression refrigeration system with data acquired at a sampling interval of 2 s. The developed system successfully captured temperature variations across critical refrigeration locations, including the compressor discharge region, condenser sections, expansion region, evaporator compartment, and ambient environment. Results showed that the compressor discharge recorded the highest average temperature of 53.58°C, while the evaporator region maintained the lowest average temperature of 10.26°C, demonstrating the ability of the system to resolve component-level thermal differences. The monitoring platform also captured transient temperature behaviour during start-up and the subsequent transition toward quasi-steady-state operation. The IoT framework provides a low-cost and scalable solution for continuous refrigeration monitoring and establishes a foundation for future integration of intelligent analytics, fault diagnosis, and predictive maintenance strategies.

1. INTRODUCTION

Refrigeration systems are essential components of modern domestic, commercial, and industrial infrastructures, supporting applications such as food preservation, pharmaceutical storage, and temperature-controlled supply chains. The increasing demand for reliable refrigeration and improved energy utilization has stimulated research into technologies capable of providing detailed information about system operating behaviour. In domestic refrigeration systems, performance is influenced by the interaction between major components, including the compressor, condenser, expansion device, and evaporator. Consequently, understanding temperature distribution and thermal response across these components is important for evaluating system operation and identifying potential performance limitations [1, 2].

Temperature monitoring remains one of the most widely adopted approaches for evaluating refrigeration system behaviour. Previous studies have demonstrated that temperature distribution within refrigeration systems is affected by airflow characteristics, refrigerant operating conditions, component arrangement, and environmental factors [1]. However, conventional monitoring methods frequently rely on limited measurement points or periodic manual data collection, which may not adequately capture the spatial and temporal variations occurring during refrigeration operation. Such limitations can reduce the ability to analyse transient behaviour, detect abnormal conditions, and develop effective maintenance strategies.

Recent advances in the Internet of Things (IoT) have created new opportunities for developing intelligent monitoring systems capable of continuous sensing, wireless communication, cloud-based data storage, and remote visualization. IoT technology integrates sensing devices, embedded processing units, communication

networks, and data platforms to enable real-time monitoring of physical systems [3, 4]. The flexibility, low cost, and scalability of IoT architectures have encouraged their adoption in diverse applications, including industrial automation, environmental monitoring, healthcare, agriculture, and energy management [4, 5]. Within refrigeration and cold-chain applications, IoT-based monitoring systems have demonstrated significant potential for improving operational visibility and maintaining desirable environmental conditions. Temperature monitoring platforms based on wireless sensors and cloud connectivity have been developed for refrigerated cabinets, cold storage facilities, and logistics systems, enabling continuous observation compared with traditional measurement approaches [6, 7]. These systems provide opportunities for early detection of undesirable operating conditions and support data-driven decision-making.

The monitoring of both temperature and humidity is particularly important in refrigeration applications because environmental conditions influence condensation behaviour, moisture migration, product quality, and overall system performance. Previous cold-chain studies have shown that multi-parameter monitoring provides more comprehensive information than temperature-only approaches, particularly where environmental stability is critical [7, 8]. Despite these developments, many existing IoT refrigeration monitoring systems focus mainly on storage temperature assessment, with limited attention given to distributed measurement of thermal behaviour across individual refrigeration components. The emergence of low-cost embedded platforms, particularly ESP32-based microcontrollers, has further simplified the development of compact IoT monitoring systems. The ESP32 provides integrated wireless communication capability, multiple digital interfaces, and sufficient processing capacity for real-time sensor data acquisition applications [5, 9]. When combined with digital temperature sensors and cloud platforms, ESP32-based systems provide an economical approach for developing intelligent monitoring solutions. For refrigeration systems, detailed component-level thermal monitoring is valuable because different sections of the vapour compression cycle experience distinct thermal behaviours. Monitoring the compressor discharge region, condenser sections, expansion region, and evaporator compartment provides additional information beyond conventional compartment temperature measurement. Such information can support refrigeration performance analysis, fault diagnosis, and future predictive maintenance strategies.

Therefore, this study presents the development and experimental evaluation of an ESP32-based IoT multi-sensor monitoring system for real-time thermal and humidity assessment of a domestic R134a refrigeration system. The developed system integrates seven DS18B20 digital temperature sensors, a DHT22 temperature-humidity sensor, a CYD TFT display interface, and the ThingSpeak cloud platform to achieve distributed sensing, local visualization, and remote monitoring.

2. MATERIALS AND METHODS

2.1 Overview of the Developed IoT Refrigeration Monitoring System

The developed monitoring system was designed as an IoT-enabled platform for real-time thermal and humidity assessment of a domestic refrigeration system. The system's architecture integrates sensing, data processing, visualization, wireless communication, and cloud storage layers to enable continuous monitoring of refrigeration operating conditions. The sensing layer consists of multiple digital temperature sensors and a

temperature-humidity sensor strategically deployed across critical locations of the refrigeration system. Distributed sensor architectures provide improved visibility of spatial variations in monitored systems compared with single-point measurement approaches, making them suitable for applications requiring detailed environmental assessment. The processing layer is implemented using an ESP32 microcontroller, which performs sensor data acquisition, local processing, and wireless communication management. The communication and cloud layer utilizes the ESP32 Wi-Fi interface and the ThingSpeak IoT platform for remote data transmission, storage, and visualization. Cloud-connected monitoring systems have been demonstrated as effective approaches for enabling remote supervision, historical data analysis, and intelligent decision-making in environmental and industrial applications [3, 4]. The overall architecture of the developed IoT refrigeration monitoring system is as shown in Fig. 1.

2.2 Hardware Components and Specifications

The developed IoT refrigeration monitoring system was implemented using commercially available embedded hardware components selected to support distributed sensing, real-time data acquisition, wireless communication, local visualization, and cloud-based data management. The hardware configuration consists of an ESP32 microcontroller, seven DS18B20 digital temperature sensors, one DHT22 temperature-humidity sensor, a 3.2-inch TFT display module, a rechargeable lithium-ion battery power system, and the ThingSpeak cloud platform. The ESP32 was selected as the central processing unit due to its integrated Wi-Fi capability, multiple communication interfaces, and suitability for low-cost IoT implementations. The DS18B20 and DHT22 sensors were selected because of their digital communication capability, ease of integration with embedded platforms, and suitability for environmental monitoring applications. The specifications and functional roles of the major hardware components used in the developed monitoring system are summarized in Table 1. The selected hardware components provide the necessary sensing, processing, communication, and visualization capabilities required for the proposed IoT refrigeration monitoring framework. Figure 2 shows the assembly of the developed ESP32-based IoT refrigeration monitoring system.

Table 1
Specifications of Major Hardware Components Used in the IoT Monitoring System

Component	Model/Type	Key specifications	Quantity	Function
Microcontroller	ESP32 development board	Integrated Wi-Fi/Bluetooth, multiple digital interfaces, low-power operation	1	Data acquisition, processing and wireless communication
Temperature sensors	DS18B20 waterproof digital sensor	OneWire communication, − 55 to 125°C range, ± 0.5°C accuracy	7	Distributed temperature measurement across refrigeration locations
Temperature-humidity sensor	DHT22 (AM2302)	Digital temperature and relative humidity measurement	1	Environmental monitoring
Display module	3.2-inch TFT display	Colour display interface	1	Local visualization of measured parameters
Power system	Rechargeable lithium-ion battery unit	Portable DC supply with charging/protection circuit	1	Autonomous operation of monitoring system
Cloud platform	ThingSpeak IoT platform	Online data storage, visualization and remote access	1	Cloud-based monitoring and data management

2.3 Circuit Design, Wiring and IoT Platform Configuration

The circuit design of the developed IoT refrigeration monitoring system was implemented to integrate the sensing modules, ESP32 microcontroller, local display interface, power supply unit, and cloud communication platform. The wiring configuration was designed to ensure reliable sensor communication, stable power distribution, and continuous transmission of refrigeration operating data. The ESP32 microcontroller served as the central processing unit, responsible for acquiring temperature and humidity measurements, processing sensor signals, controlling the display interface, and transmitting collected data through a Wi-Fi connection. The seven DS18B20 temperature sensors were connected through a common OneWire communication bus, enabling multiple temperature measurements using a single digital input channel. The DHT22 sensor was integrated through a digital interface to acquire ambient temperature and relative humidity data. A TFT display module was incorporated to provide local visualization of measured parameters during system operation, while the rechargeable battery system and protection module provided stable power delivery to the monitoring unit. The developed power arrangement enabled portable operation and supported continuous monitoring during refrigeration experiments. For remote monitoring, the ESP32 was configured to transmit acquired sensor data to the ThingSpeak cloud platform through Wi-Fi communication. The cloud interface was configured to store and visualize temperature and humidity measurements from the refrigeration system, enabling real-time access, historical data analysis, and future integration with intelligent diagnostic approaches [3, 4, 5]. Figure 3 presents the electrical connection diagram of the developed ESP32-based IoT refrigeration monitoring system.

2.4 Refrigeration System Description

The experimental investigation was conducted on a domestic vapour compression refrigeration system operating with R134a refrigerant. The system was selected because domestic refrigeration units represent one of the most widely used vapour compression applications and provide a suitable platform for evaluating thermal behaviour under practical operating conditions. The refrigeration system employed a 1 HP hermetic compressor as the primary driving component of the vapour compression cycle. The compressor circulates the refrigerant through the refrigeration loop by increasing the pressure and temperature of the refrigerant vapour before it enters the condenser. Vapour compression refrigeration systems generally consist of four major components: compressor, condenser, expansion device, and evaporator, which work together to achieve continuous heat removal from the refrigerated space [10].

During operation, low-pressure refrigerant vapour leaving the evaporator is compressed to a high-pressure state by the compressor. The high-temperature refrigerant then enters the condenser, where heat is rejected to the surrounding environment and the refrigerant changes into a high-pressure liquid state. The liquid refrigerant subsequently passes through the expansion device, where pressure reduction occurs, producing a low-temperature refrigerant mixture that enters the evaporator to absorb heat from the refrigerated compartment [10, 11]. The use of R134a refrigerant in the experimental system provides a representative case for domestic refrigeration analysis because it has historically been widely applied in household refrigeration systems due to its favourable thermodynamic characteristics and compatibility with existing refrigeration components [12]. Although alternative low-global-warming-potential refrigerants are increasingly being investigated, R134a remains an important reference refrigerant for comparative experimental studies [13].

The main refrigeration components monitored during the experiment included: compressor discharge region; condenser inlet and outlet sections; condenser surface region; expansion region; evaporator compartment; surrounding ambient environment. The component-level temperature measurements enabled evaluation of thermal variations throughout the refrigeration cycle and provided insight into heat rejection, heat absorption, and transient operating behavior.

2.5 Experimental Setup, Sensor Deployment and Data Acquisition Procedure

The experimental evaluation was conducted on the domestic refrigeration system under normal operating conditions to investigate the thermal behaviour of different refrigeration components. The developed IoT monitoring platform was installed on the refrigeration unit, and temperature and humidity measurements were continuously acquired during operation. The experimental setup consisted of the refrigeration system, the developed ESP32-based data logger, distributed temperature sensors, a temperature-humidity sensor, local display interface, and cloud monitoring platform. The complete experimental set-up and sensor deployment locations are presented in Figs. 4 and 5 respectively.

Seven DS18B20 temperature sensors were strategically positioned at critical locations of the refrigeration system to capture temperature variations throughout the vapour compression cycle. The sensor locations were selected to provide information regarding heat absorption, compression, heat rejection, and environmental influence. The sensor deployment arrangement was as follows: T1 (evaporator compartment temperature); T2 (condenser inlet temperature); T3 (condenser outlet temperature); T4 (expansion region temperature); T5 (condenser surface (fin) temperature); T6 (compressor discharge temperature); T7 (ambient

temperature). The DHT22 sensor was positioned near the refrigeration system to measure surrounding temperature and relative humidity conditions during operation. The use of multiple sensing locations enables detailed evaluation of spatial temperature variations, which provides more information compared with conventional single-point refrigeration monitoring approaches [6].

During the experiment, the ESP32 microcontroller continuously acquired temperature and humidity measurements from all connected sensors. The sampling interval was configured at 2 seconds, allowing high-resolution observation of transient temperature variations during system start-up and subsequent stabilization. The acquired measurements were simultaneously displayed locally through the TFT interface and transmitted through the ESP32 Wi-Fi connection to the ThingSpeak cloud platform for remote storage and visualization as shown in Fig. 6. Cloud-based data acquisition enables continuous monitoring, historical data analysis, and accessibility of operational information without requiring direct physical access to the monitoring device [3, 5, 14]. The refrigeration system was operated continuously, and measured data were collected throughout the monitoring period. The recorded dataset was subsequently analysed to evaluate: temperature distribution across refrigeration components; transient thermal response during operation; transition toward quasi-steady-state conditions; relative humidity variation during refrigeration operation. The experimental conditions used for the refrigeration evaluation are summarized in Table 2.

Table 2
Experimental operating conditions of the refrigeration system

Parameter	**Value**
Refrigeration system type	Domestic vapour compression refrigeration system
Refrigerant	R134a
Compressor rating	1 HP
Monitoring parameters	Temperature and relative humidity
Temperature sensors	Seven DS18B20 sensors
Humidity sensor	DHT22
Sampling interval	2 seconds
Data transmission	ESP32 Wi-Fi
Cloud platform	ThingSpeak

3. RESULTS AND DISCUSSION

3.1 Temperature Distribution Across Refrigeration Components

The temperature distribution across the monitored refrigeration locations is presented in Fig. 7. The results demonstrate significant thermal variation among the different measurement points, reflecting the different thermodynamic functions of each component within the vapour compression refrigeration cycle. The

condenser inlet region (T6) recorded the highest average temperature of 53.58°C among all monitored locations. This elevated temperature is attributed to the entry of high-temperature, high-pressure refrigerant vapour into the condenser after the compression process. At this stage, the refrigerant carries a significant amount of thermal energy that must be rejected to the surrounding environment during the condensation process. The condenser inlet temperature is an important indicator of condenser thermal loading because it reflects the temperature condition of refrigerant entering the heat rejection stage and is influenced by refrigerant properties, operating conditions, and system heat transfer behaviour [15]. The condenser region (T2) recorded an average temperature of 49.11°C, which was lower than the condenser inlet temperature due to the initial heat transfer occurring between the refrigerant and the condenser structure. As the refrigerant travelled through the condenser, continuous heat rejection resulted in a further reduction in temperature, reaching 38.36°C at the condenser outlet (T3). The observed temperature reduction of approximately 10.75°C between T2 and T3 confirms the heat rejection process occurring within the condenser section. Similar condenser temperature behaviour has been reported in domestic refrigeration studies, where temperature reduction along the condenser length is associated with refrigerant heat transfer to the surrounding environment [1, 2].

The condenser fin temperature (T5) recorded an average value of 42.83°C, which was between the condenser inlet temperature (T6) and condenser outlet temperature (T3). This behaviour represents the thermal response of the condenser surface as heat is transferred from the refrigerant flow path to the external fin structure before being released into the surrounding air. The measured fin temperature reflects the combined influence of refrigerant heat transfer, condenser material characteristics, airflow conditions, and ambient temperature. The effectiveness of condenser heat rejection is strongly influenced by airflow conditions, condenser geometry, surface characteristics, and environmental conditions [16, 17]. The expansion region (T4) recorded an average temperature of 35.96°C. Since the sensor was mounted externally around the expansion region, the measured value represents the surrounding thermal condition of the component rather than the actual refrigerant temperature immediately after the expansion process. However, the measurement provides useful information regarding the thermal behaviour of the expansion section during system operation.

The evaporator compartment (T1) recorded the lowest average temperature of 10.26°C, demonstrating the cooling effect produced within the refrigerated space. The temperature difference between the evaporator compartment and the condenser inlet region was approximately 43.32°C, indicating the large thermal gradient developed between the cooling and heat rejection sections of the refrigeration cycle. Temperature distribution within domestic refrigeration systems is influenced by evaporator configuration, air circulation patterns, insulation characteristics, and operating conditions [1]. The ambient temperature (T7) was measured as 27.44°C, providing the reference environmental condition during the experiment. The difference between ambient temperature and condenser surface temperature represents the temperature driving force responsible for heat transfer from the refrigeration system to the surrounding environment. Overall, the measured temperature distribution confirms the capability of the developed IoT monitoring system to capture spatial thermal variations across critical refrigeration locations. Unlike conventional single-point monitoring approaches, the distributed sensing arrangement provides a more detailed understanding of component-level thermal behaviour by simultaneously monitoring refrigerant flow regions, heat transfer surfaces, and surrounding environmental conditions. This information can support refrigeration performance evaluation, fault identification, energy optimization, and future intelligent monitoring applications [6].

3.2 Transient Temperature Response and Quasi-Steady-State Behaviour

The transient temperature response of the refrigeration system during the 24-hour monitoring period is presented in Fig. 8. The developed IoT monitoring platform successfully captured the temperature evolution of different refrigeration components from system start-up to stable operating conditions. The temperature profiles demonstrate the capability of the proposed multi-sensor architecture to provide real-time visualization of thermal interactions occurring across different sections of the refrigeration cycle. During the initial start-up period, all monitored locations exhibited rapid temperature variations as the refrigeration system transitioned from inactive conditions to active operation. The condenser inlet region (T6) recorded the highest temperature throughout the monitoring period, increasing rapidly from approximately 15°C at start-up to about 50°C within the first two hours before gradually approaching a stable value of approximately 54°C. This elevated temperature is associated with the entry of high-pressure superheated refrigerant vapour into the condenser after compression, where heat rejection begins. The condenser inlet temperature represents an important indicator of the thermal load imposed on the condenser because it reflects the temperature condition of refrigerant entering the heat rejection stage. Continuous monitoring of this region provides valuable information regarding condenser loading, heat rejection behaviour, and overall refrigeration system performance [18, 19].

The condenser temperature region (T2) exhibited a similar thermal response, increasing rapidly during the start-up period and stabilizing at approximately 47°C. The temperature difference between T6 and T2 indicates the progressive reduction in refrigerant temperature as heat is transferred from the refrigerant to the surrounding environment within the condenser. In contrast, the condenser outlet temperature (T3) reached a lower steady-state value of approximately 35°C, confirming the continuous removal of heat during the condensation process. This behaviour agrees with previous studies that identified condenser temperature variations as important indicators of heat transfer effectiveness and refrigeration system efficiency [20, 21]. The simultaneous measurement of condenser inlet, condenser body temperature, and condenser outlet temperature provides improved understanding of condenser thermal behaviour compared with conventional monitoring approaches based on a single temperature measurement point. The condenser fin temperature (T5) increased from the initial condition and stabilized at approximately 39°C. This temperature remained between the condenser temperature (T2) and condenser outlet temperature (T3), representing the surface thermal response of the heat rejection component. The measured fin temperature reflects the combined effects of refrigerant heat transfer, condenser material characteristics, airflow conditions, and interaction with the surrounding environment. Incorporating surface temperature measurement within the distributed IoT sensing framework provides additional information for evaluating heat transfer distribution and component-level thermal performance.

The expansion valve region (T4) exhibited an intermediate temperature response, increasing from approximately 15°C during start-up to a stable value of about 31°C. This behaviour corresponds to the pressure reduction region between the high-pressure condenser side and the low-pressure evaporator side, where refrigerant expansion occurs before entering the evaporator. The evaporator region (T1) maintained the lowest temperature among all monitored locations. The temperature increased from approximately 8°C during start-up and stabilized at around 12°C after the initial operating period. This behaviour represents the cooling

effect produced within the refrigerated compartment as the system approached thermal equilibrium. Evaporator temperature remains a critical parameter for evaluating refrigeration performance because it directly influences cooling effectiveness and thermal stability [20]. The ability of the proposed IoT platform to continuously monitor the evaporator alongside other refrigeration components provides a more complete representation of system thermal behaviour. The ambient temperature (T7) remained relatively stable throughout the monitoring period, varying around 28°C. Maintaining ambient temperature measurements provides an important reference for interpreting refrigeration performance because external environmental conditions influence condenser heat rejection and overall system operation [20].

After approximately four hours of operation, all measured temperatures exhibited only minor variations, indicating that the refrigeration system had reached a quasi-steady-state condition. The stabilization observed across the monitored locations confirms the suitability of the developed IoT monitoring platform for long-duration refrigeration assessment. Transient and steady-state analysis is important in refrigeration studies because start-up behaviour can significantly influence measured operating conditions and overall system performance evaluation [22–24]. Figure 6 demonstrates that the developed IoT monitoring system can effectively capture both transient and quasi-steady-state thermal behaviour across multiple refrigeration components. The integration of distributed temperature sensing, embedded processing, wireless communication, and cloud-based monitoring provides a practical approach for real-time refrigeration analysis. The component-level thermal information obtained from the system establishes a foundation for future intelligent refrigeration applications, including fault diagnosis, energy optimization, and predictive maintenance strategies.

3.3 Relative Humidity Behaviour and Environmental Condition Analysis

The relative humidity variation measured near the evaporator region during the 24-hour monitoring period is presented in Fig. 9. The integration of humidity measurement into the developed IoT monitoring platform provides additional information regarding the moisture behaviour associated with refrigeration operation. Continuous monitoring of humidity alongside temperature is important because moisture conditions influence refrigeration performance, condensation behaviour, and product preservation conditions [25]. During the initial start-up period, the evaporator region relative humidity exhibited a rapid decrease. The humidity near the evaporator reduced from approximately 75% to about 45%, reaching a stable condition after the initial cooling period. This reduction is attributed to the decrease in air temperature during refrigeration operation, which reduces the moisture-holding capacity of air and promotes moisture condensation on colder evaporator surfaces. The relationship between air temperature reduction, relative humidity variation, and moisture condensation is a fundamental phenomenon in refrigerated environments and influences evaporator surface conditions [25].

The reduction in humidity near the evaporator region can be associated with the influence of the colder evaporator surface, where localized cooling enhances moisture removal through condensation. Moisture accumulation on evaporator surfaces is an important factor affecting frost formation, defrosting requirements, and heat transfer performance in household refrigeration systems [25]. Therefore, monitoring humidity variation alongside temperature distribution provides additional insight into the interaction between thermal

conditions and moisture behaviour within refrigeration environments. After approximately four to five hours, the relative humidity near the evaporator reached a quasi-steady-state condition. During this period, the humidity level remained within the range of approximately 43–45% RH for the remaining monitoring duration. The minor fluctuations observed during continuous operation may be attributed to variations in evaporator temperature, compressor cycling behaviour, air circulation, and moisture exchange within the refrigerated compartment. Previous refrigeration studies have shown that maintaining stable temperature and humidity conditions is essential for ensuring efficient operation and maintaining suitable storage environments [25].

The observed humidity behaviour agrees with previous IoT-based environmental monitoring studies, where continuous measurement of temperature and humidity parameters was identified as an effective approach for improving operational awareness in cold-chain and refrigeration applications [26, 27]. Unlike conventional refrigeration monitoring approaches that mainly focus on temperature measurement, the proposed system integrates humidity sensing to provide a more comprehensive assessment of refrigeration environmental conditions. The combination of distributed temperature measurement, humidity monitoring, embedded processing, and cloud-based data accessibility enhances the capability of the developed IoT platform for real-time refrigeration analysis and future intelligent applications.

3.4 Comparative Analysis of Existing IoT-Based Refrigeration and Cold-Chain Monitoring Systems

The developed IoT refrigeration monitoring system was compared with existing IoT-based monitoring approaches to highlight its contribution in terms of sensing capability, system architecture, and application scope. Previous studies have demonstrated the potential of IoT technologies for improving refrigeration monitoring through wireless sensing, remote data access, and cloud-based visualization. Ramírez-Faz et al. demonstrated the feasibility of low-cost IoT monitoring for refrigerated cabinets using open-source hardware and cloud-based data management; however, the system focused mainly on cabinet-level temperature monitoring rather than detailed analysis of refrigeration component behaviour. Similarly, Maheswaran et al. developed an ESP32-based cold-chain monitoring system incorporating temperature and humidity sensing with remote alert capability, while Utami et al. investigated IoT-based temperature and humidity monitoring for vaccine cold-chain storage. These approaches provide valuable information about environmental conditions but do not evaluate thermal interactions occurring across individual refrigeration components. In contrast, the developed ESP32-based monitoring platform extends beyond conventional environmental monitoring by deploying multiple sensors across critical refrigeration locations, including the condenser inlet, condenser, condenser outlet, condenser surface, expansion region, evaporator, evaporator humidity region, and ambient environment. This distributed sensing approach enables detailed evaluation of transient temperature response, heat rejection behaviour, evaporator cooling performance, and moisture variation within the refrigeration system. Therefore, the developed system provides a more comprehensive component-level thermo-hygrometric assessment compared with existing IoT monitoring approaches. Table 3 summarizes the comparison between the developed system and selected existing IoT-based refrigeration monitoring approaches. The comparison demonstrates that the developed system extends existing IoT refrigeration monitoring approaches by combining distributed component-level temperature measurement, humidity monitoring, local visualization, and cloud-based remote access within a single low-cost platform. This

capability provides improved insight into refrigeration system behaviour and creates opportunities for future integration with intelligent fault detection and predictive maintenance frameworks.

Table 3
Summary of comparative analysis of existing IoT-based refrigeration and cold-chain monitoring systems.

Study	Monitoring platform	Parameters measured	Sensor deployment	Cloud monitoring	Main application
Ramírez-Faz *et al.* (2020) [27]	Open-source IoT monitoring platform	Temperature	Refrigerated cabinet environment	Yes	Retail refrigerated cabinet monitoring
Maheswaran *et al.* (2024) [28]	ESP32-based IoT cold-chain monitoring system	Temperature, humidity, environmental parameters	Cold-storage transportation environment	Yes (Telegram-based remote monitoring)	Cold-chain security and environmental condition monitoring
Utami *et al.* (2025) [30]	IoT cold-chain monitoring platform	Temperature and humidity	Vaccine storage environment	Yes (Firebase/web dashboard/Telegram)	Vaccine cold-chain monitoring
Goel *et al.* (2023) [31]	ESP32-based smart refrigerator IoT system	Temperature and humidity	Refrigerator chamber	Yes	Smart refrigerator monitoring and automation
Baghel *et al.* (2024) [32]	IoT integrated sensing and logging system	Temperature and humidity	Cold-chain logistics environment	Yes	Temperature-sensitive goods monitoring
Mandal *et al.* (2025) [33]	IoT-enabled cold storage monitoring system	Temperature and relative humidity	Cold storage facility	Yes (ThingSpeak/web server)	Agricultural cold-storage monitoring
Developed system	ESP32-based IoT refrigeration monitoring platform	Multi-point temperature and humidity	Condenser inlet, condenser, condenser outlet, condenser fin, expansion region, evaporator temperature, evaporator humidity, and ambient condition	Yes (cloud-based visualization)	Component-level refrigeration thermal and humidity analysis

4. CONCLUSION

This study presented the development and experimental evaluation of an ESP32-based IoT multi-sensor monitoring system for real-time thermal and humidity assessment of a domestic R134a refrigeration system. The developed platform successfully integrated distributed temperature sensing, humidity measurement, local visualization, and cloud-based monitoring through the ThingSpeak platform. The experimental results demonstrated the capability of the system to capture thermal variations across critical refrigeration locations. The compressor discharge region recorded the highest average temperature of 53.58°C, while the evaporator region maintained the lowest temperature of 10.26°C, confirming the effectiveness of the developed platform for component-level thermal analysis. The 2-second sampling capability enabled detailed observation of transient behaviour and stabilization trends during refrigeration operation. Overall, the proposed IoT monitoring system provides a low-cost and scalable solution for continuous refrigeration assessment. The generated high-resolution dataset provides a foundation for future development of intelligent refrigeration systems incorporating predictive analytics, fault diagnosis, and autonomous control strategies.

Declarations

Ethics approval

Not applicable. This study did not involve human participants, animals, or any personal or sensitive data.

Consent to participate

Not applicable. The study did not involve human participants or animals, and therefore no consent to participate was required.

Consent to publish

All authors have read and approved the final version of this manuscript and consent to its publication in this journal.

Competing interests

The authors declare no competing interests.

Funding

This research was supported by the Tertiary Education Trust Fund (TETFund) under the Academic Staff Training and Development (AST&D) Programme of Olusegun Agagu University of Science and Technology, Okitipupa, Nigeria.

Author Contribution

JFE: Conceptualization, development, experimental set-up, data analysis, and writing; BOB: Supervision, methodology, guidance, and critical review; and OAO: Supervision, validation, and editing. All authors read and approved the final manuscript.

Acknowledgement

The authors wish to acknowledge the Management of Olusegun Agagu University of Science and Technology, Okitipupa, for their administrative and institutional support throughout the course of this research.

Data Availability

The datasets and analysed during the current study are available from the corresponding author on reasonable request.

References

1. Muneeshwaran M, Yang CM, Nawaz K, Wang CC. Understanding airflow pattern and temperature distribution in domestic refrigerators: A review analyzing recent developments and bridging knowledge gaps. Sustain Energy Technol Assess. 2023;57:103171. https://doi.org/10.1016/j.seta.2023.103171.
2. Pardo-Cely D, Belman-Flores JM, Gallegos-Muñoz A, Rodríguez-Valderrama DA. Effect of refrigerant charge variation on the energy and thermal performance of a domestic refrigerator. J Therm Eng. 2024;10(6):1453–64. https://doi.org/10.14744/thermal.0000886.
3. Hermes CJL, Melo C. A first-principles simulation model for the start-up and cycling transients of household refrigerators. Int J Refrig. 2008;31(8):1341–57. https://doi.org/10.1016/j.ijrefrig.2008.04.003.
4. Choudhary A. Internet of Things: A comprehensive overview, architectures, applications, simulation tools, challenges and future directions. Discover Internet Things. 2024;4. https://doi.org/10.1007/s43926-024-00084-3. Article 31.
5. Belman-Flores JM, Ledesma S, Rodríguez-Valderrama DA, Hernández-Fusilier D. Energy optimization of a domestic refrigerator controlled by a fuzzy logic system using the status of the door. Int J Refrig. 2019;104:1–8. https://doi.org/10.1016/j.ijrefrig.2019.04.025.
6. Gubbi J, Buyya R, Marusic S, Palaniswami M. Internet of Things (IoT): A vision, architectural elements, and future directions. Future Generation Comput Syst. 2013;29(7):1645–60. https://doi.org/10.1016/j.future.2013.01.010.
7. Al-Fuqaha A, Guizani M, Mohammadi M, Aledhari M, Ayyash M. Internet of Things: A survey on enabling technologies, protocols, and applications. IEEE Commun Surv Tutorials. 2015;17(4):2347–76. https://doi.org/10.1109/COMST.2015.2444095.
8. Khan WZ, Rehman MH, Zangoti HM, Afzal MK, Armi N, Salah K. Industrial Internet of Things: Recent advances, enabling technologies and open challenges. Comput Electr Eng. 2020;81:106522. https://doi.org/10.1016/j.compeleceng.2019.106522.

9. Maier A, Sharp A, Vagapov Y. (2017). Comparative analysis and practical implementation of the ESP32 microcontroller module for the Internet of Things. In *2017 Internet Technologies and Applications (ITA)* (pp. 143–148). IEEE. https://doi.org/10.1109/ITECHA.2017.8101926
10. Akinola AO, Umar S, Eiche JF, Akinsade A. Development of solar operated evaporative refrigerating system. Saudi J Eng Technol. 2022;7(6):299–304. https://doi.org/10.36348/sjet.2022.v07i06.004.
11. Alsouda F, Bennett NS, Saha SC, Salehi F, Islam MS. Vapor compression cycle: A state-of-the-art review on cycle improvements, water and other natural refrigerants. Clean Technol. 2023;5(2):584–608. https://doi.org/10.3390/cleantechnol5020030.
12. Sharif MZ, Azmi WH, Ghazali MF, Samykano M, Ali HM. Performance improvement strategies of R1234yf in vapor compression refrigeration system as a R134a replacement: A review. J Taiwan Inst Chem Eng. 2023;148:105032. https://doi.org/10.1016/j.jtice.2023.105032.
13. Belman-Flores JM, Heredia-Aricapa Y, García-Pabón JJ, Pérez-García V, Pérez-Reguera CG. Drop-in replacement of R134a in a household refrigerator with low-GWP refrigerants R513A, R516A, and R1234ze(E). Energies. 2023;16(8). https://doi.org/10.3390/en16083422. Article 3422.
14. Akinsade A, Iyaomolere BA, Oluwasegun OO, Lasisi AR. Development of an IoT-enabled real-time temperature data logger for laboratory-scale pyrolysis reactor applications. Adv J Sci Eng Technol. 2025;10(12):1–18. https://doi.org/10.5281/zenodo.17963424.
15. Aized T, Rashid M, Riaz F, Hamza A, Nabi HZ, Sultan M, Ashraf WM, Krzywanski J. Energy and exergy analysis of vapor compression refrigeration system with low-GWP refrigerants. Energies. 2022;15(19). https://doi.org/10.3390/en15197246. Article 7246.
16. Borikar SA, Borikar DA, Panchal H, Cuce E, Dalkilic AS, Alrubaie AJ, Jaber MM. An experimental case study on the effect of condenser geometry in a refrigerator: Sub-cooling and coefficient of performance issues. Int J Refrig. 2023;148:75–82. 10.1016/j.ijrefrig.2023.01.002.
17. Morozyuk L, Sokolovska-Yefymenko V, Moshkatiuk A, Ierin V, Basov A. Experimental study and analysis of an air-cooled condenser with the fouling on the heat exchange surface for small-scale commercial refrigeration systems. Int J Air-Conditioning Refrig. 2023;31., Article 18. 10.1007/s44189-023-00034-8.
18. Li H, Su Z, Zhao C, An T, Qin X, Chen G, Gao J, Zhang Y. Influence of compressor speed on the performance of low pressure vapor-injected refrigeration systems. Therm Sci. 2024;28(3A):2043–9. https://doi.org/10.2298/TSCI2403043L.
19. Dabas JK, Kumar S, Dodeja AK, Kasana KS. Experimental investigation of a refrigeration system working under transient conditions. Int J Air-Conditioning Refrig. 2014;22(3). Article 1450013. https://doi.org/10.1142/S2010132514500138.
20. Oruç V, Devecioğlu AG, İlhan DB. Retrofit of an internal heat exchanger in a R404A refrigeration system using R452A: Experimental assessment on the energy efficiency and CO_2 emissions. Next Energy. 2024;3., Article 100107. https://doi.org/10.1016/j.nxener.2024.100107.
21. Pérez-Gomariz M, López-Gómez A, Cerdán-Cartagena F. Artificial neural networks as artificial intelligence technique for energy saving in refrigeration systems—A review. Clean Technol. 2023;5(1):116–36. https://doi.org/10.3390/cleantechnol5010007.
22. Guo N, Lin J, Wu J, Zhao Y. (2024). Transient thermal analysis of the rotary compressor during startup process. *International Journal of Refrigeration, 157*, 34–42.

https://doi.org/10.1016/j.ijrefrig.2023.10.012Santos, R., Espindola, D., & Pereira, M. (2022). Modelling and validation of steady-state operating conditions in domestic refrigerators. *Applied Thermal Engineering, 205*, 118093. https://doi.org/10.1016/j.applthermaleng.2022.118093.

23. Husain SM, İpek M, Çağlayan A, Aynur TN, Kocatürk S, Bedir H. Dynamic modelling of the steady state and load processing operation of a domestic refrigerator cooled through natural convection. Int J Refrig. 2023;146:15–27. https://doi.org/10.1016/j.ijrefrig.2022.08.015.
24. Liang C, He D, Liu H, Oh J, Braun JE, Groll EA, Ziviani D. Investigation of a flexible triple-evaporator domestic refrigerator/freezer with R600a with integrated economization. Int J Refrig. 2024;165:375–92. https://doi.org/10.1016/j.ijrefrig.2024.05.029.
25. Liu G, Xiong T, Sun T, He G, Yan G. Frosting and defrosting characteristics of household refrigerators and freezers: Recent progress and perspectives. Energy Build. 2024;303:113755. https://doi.org/10.1016/j.enbuild.2023.113755.
26. Maheswaran S, Gomathi RD, Sathesh S, Poovizhi S, Ridhish R, Nanthakkumaran S, Chinnadurai M. Intelligent cold chain security: Nano power temperature sensors, ESP32 and Telegram bot integration for temperature assurance and environmental harm prevention. J Environ Nanatechnol. 2024;13(1):17–25. https://doi.org/10.13074/jent.2024.03.241492.
27. Ramírez-Faz J, Fernández-Ahumada LM, Fernández-Ahumada E, López-Luque R. Monitoring of temperature in retail refrigerated cabinets applying IoT over open-source hardware and software. Sensors. 2020;20(3):846. https://doi.org/10.3390/s20030846.
28. Mohammed M, Riad K, Alqahtani N. Design of a smart IoT-based control system for remotely managing cold storage facilities. Sensors. 2022;22(13). Article 4680. https://doi.org/10.3390/s22134680.
29. Tsang YP, Choy KL, Wu CH, Ho GTS, Lam HY, Koo PS. An IoT-based cargo monitoring system for enhancing operational effectiveness under a cold chain environment. Int J Eng Bus Manage. 2017;9:1–13. https://doi.org/10.1177/1847979017749063.
30. Utami NA, Hendrawan A, Arman M, Khakim N, Aziz R. Design of a temperature and humidity monitoring system based on the Internet of Things for cold chain vaccine storage. Jurnal Otomasi Kontrol dan Instrumentasi. 2025;17(2). https://doi.org/10.5614/joki.2025.17.2.5.
31. Goel SK, Harish S, Ramachandran V. (2023). IoT based smart refrigerator and shopping system prototype. *Proceedings of the IEEE International Conference on Intelligent and Advanced Systems*. https://doi.org/10.1109/i-PACT58649.2023.10434662
32. Baghel LK, Raina R, Kumar S, Catarinucci L. IoT based integrated sensing and logging solution for cold chain monitoring applications. IEEE J Radio Freq Identif. 2024. https://doi.org/10.1109/JRFID.2024.3488534.
33. Mandal S, Sharma PK, Chopra S, Dhingra D. IoT-enabled solar powered temperature and relative humidity monitoring system for cold storages. J Agricultural Eng. 2025;62(1):95–104. https://doi.org/10.52151/jae2025621.1904.

Figures

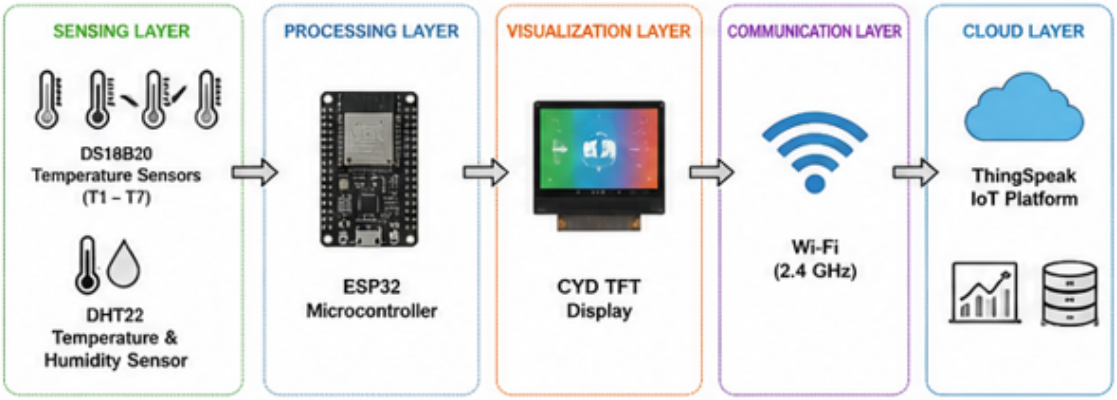

Figure 1

Functional architecture of the developed ESP32-based IoT refrigeration monitoring system.



Figure 2

Assembly of the developed ESP32-based IoT thermal monitoring system.

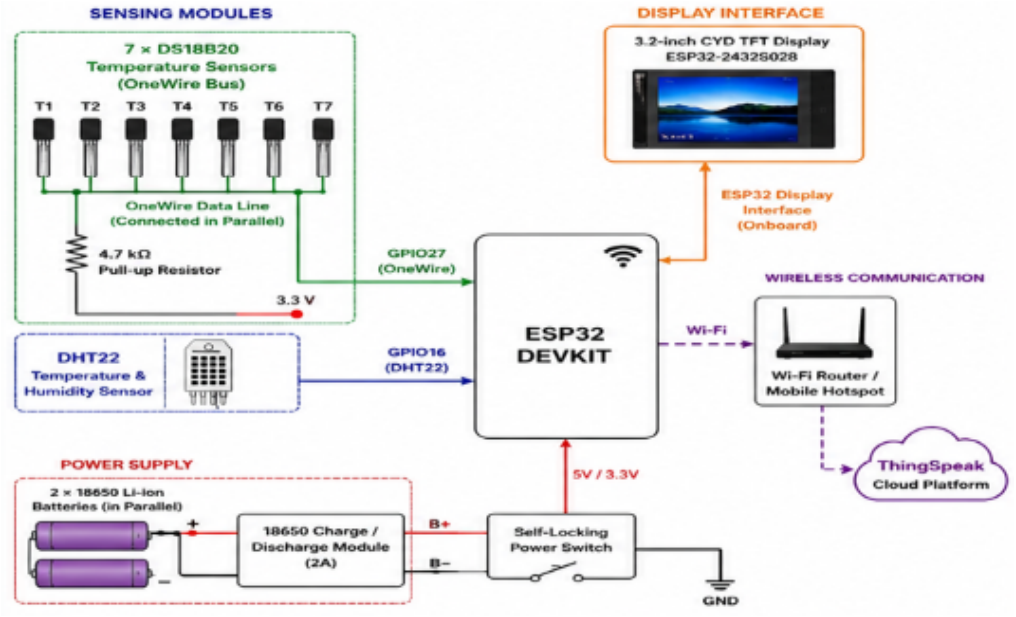

Figure 3

Circuit diagram of the developed ESP32-based IoT refrigeration monitoring system.

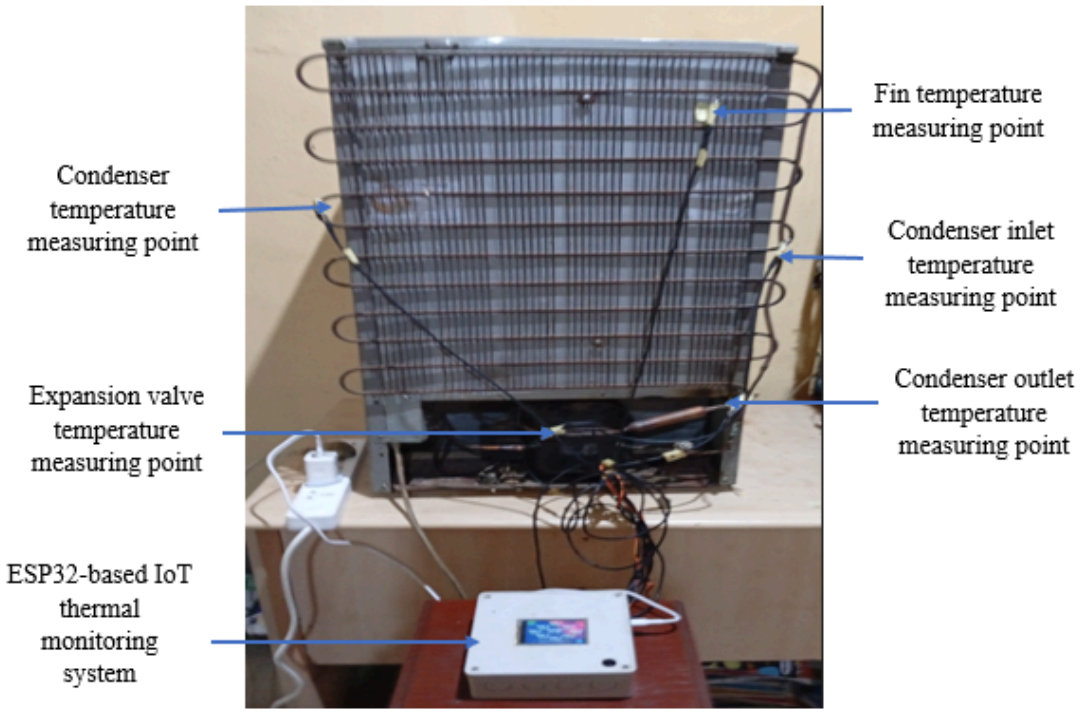

Figure 4

Experimental set-up.

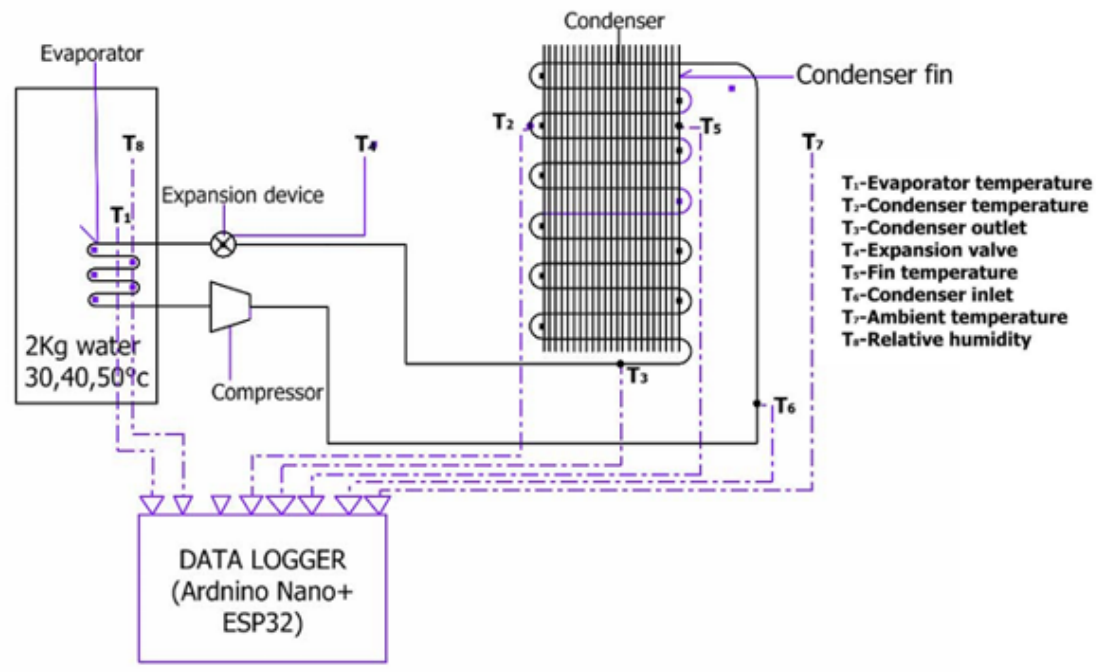

Figure 5

Sensor deployment locations on the domestic refrigeration system.

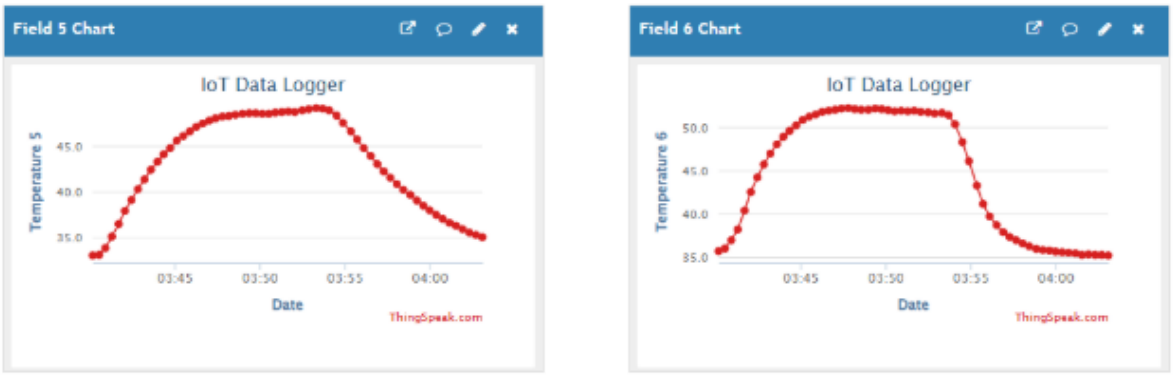

Figure 6

ThingSpeak cloud dashboard for real-time temperature and humidity visualization.

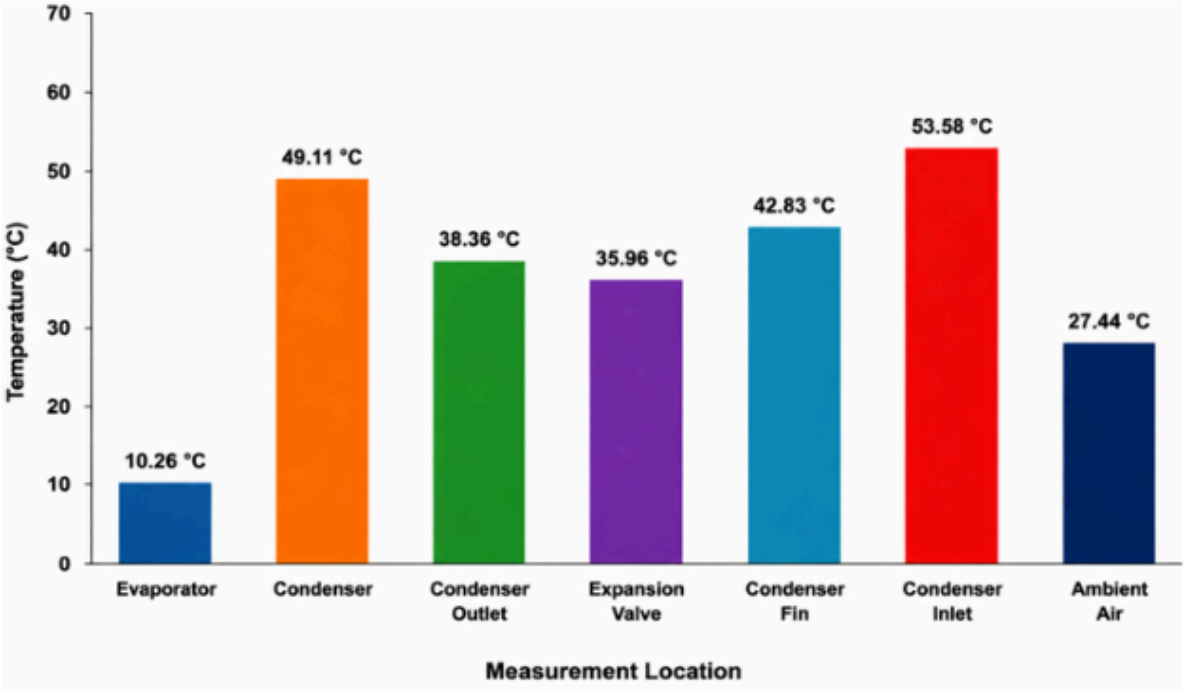

Figure 7

Average temperature distribution across the monitored refrigeration locations.

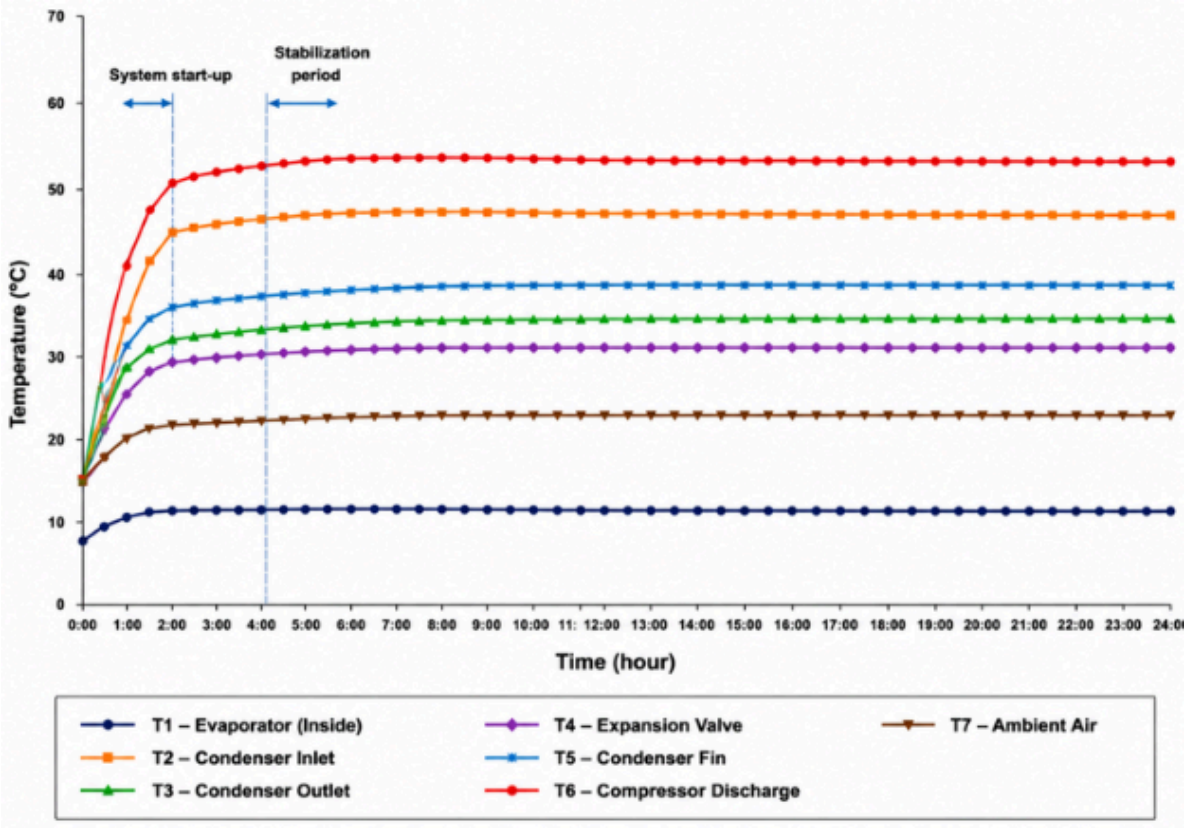

Figure 8

Transient temperature response of monitored refrigeration locations during operation.

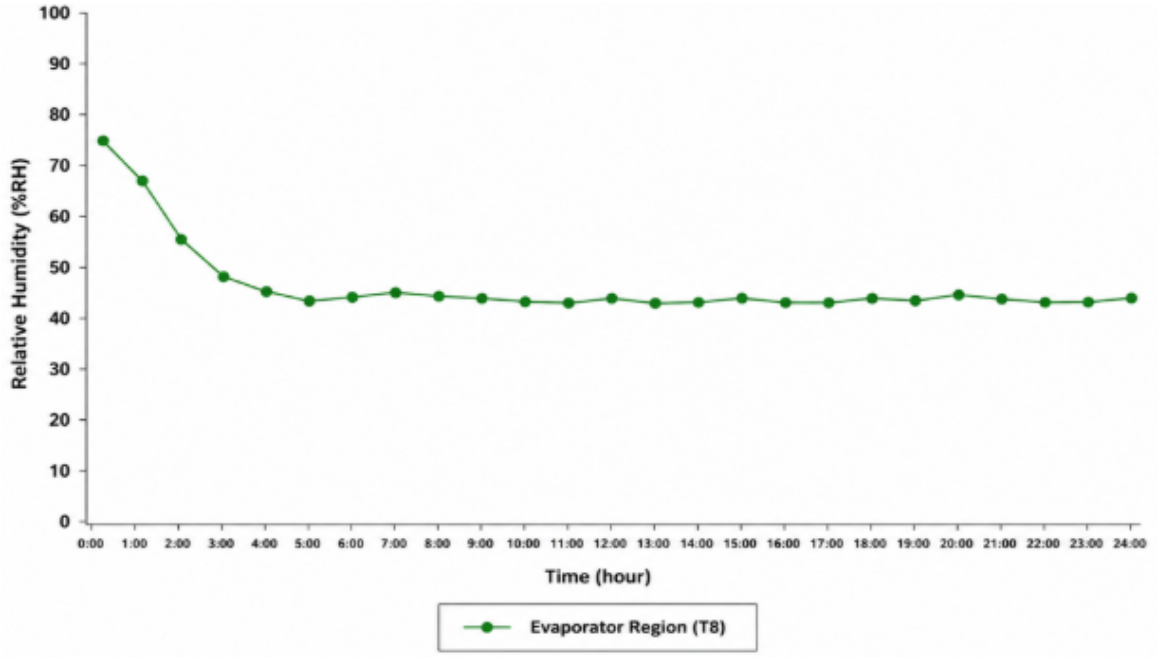

Figure 9

Relative Humidity Variation During Refrigeration Monitoring.