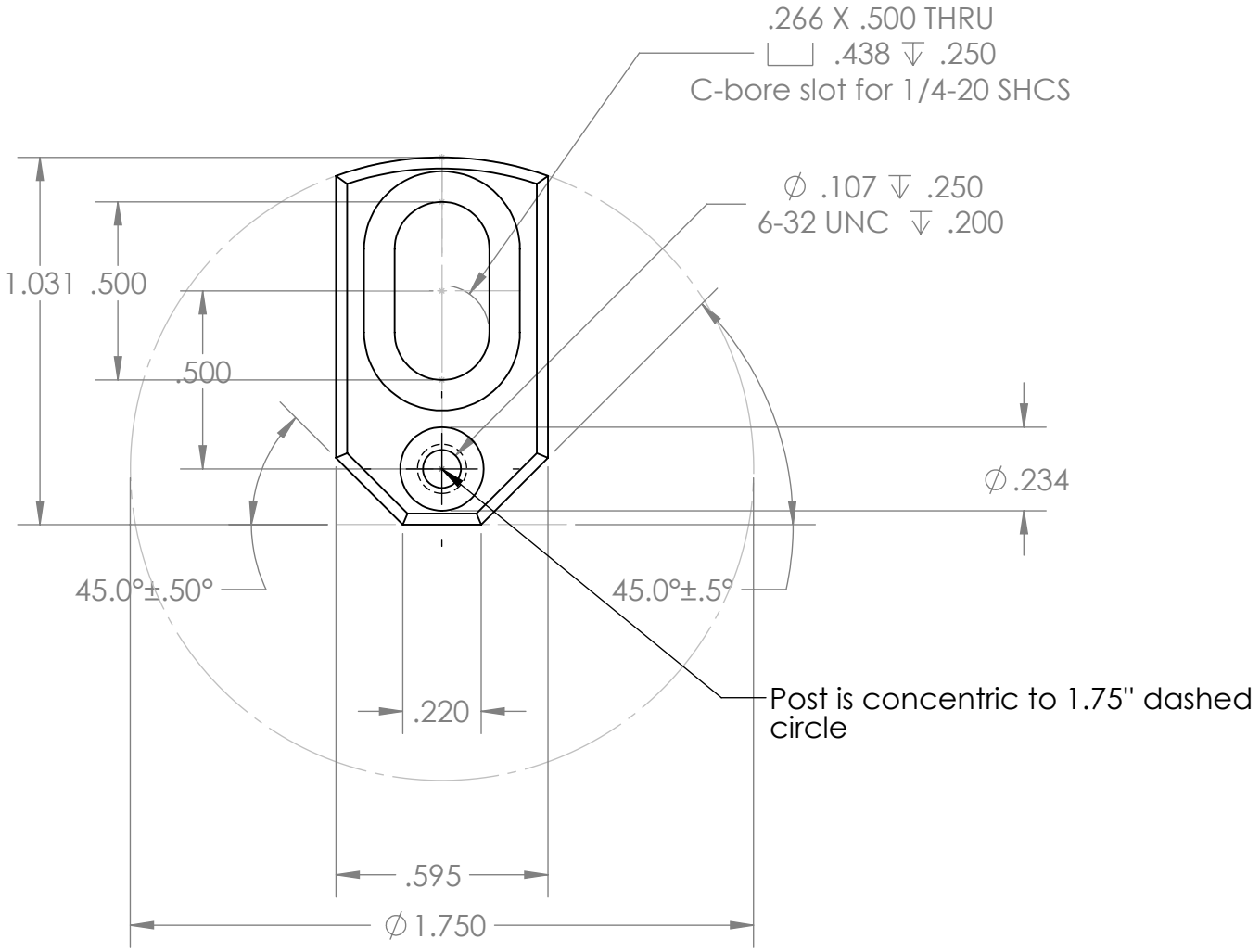

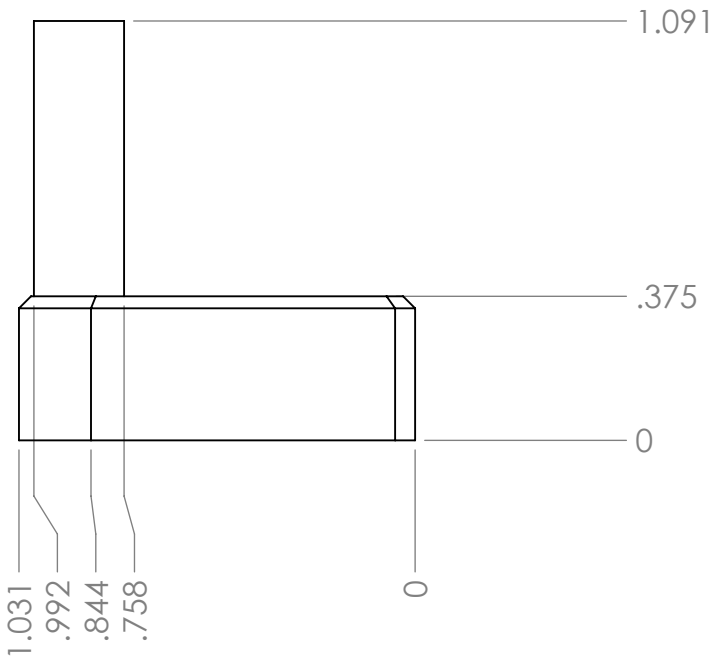

Author	Franklin Fuller
Part Name	StaticBrushMount
Units	inches
Precision	+/- 0.005 inches (0.127 mm), unless noted otherwise
Material	Aluminum
Qty	2
Sheet Name	N/A
# Sheets	1